SFEEDUP HIGH SPEED & FEED

INDUSTRY 4.0 PRODUCT ANNOUNCEMENT •UPDATE• 2026

DIPOSHEXA™

MILLING PRODUCTS

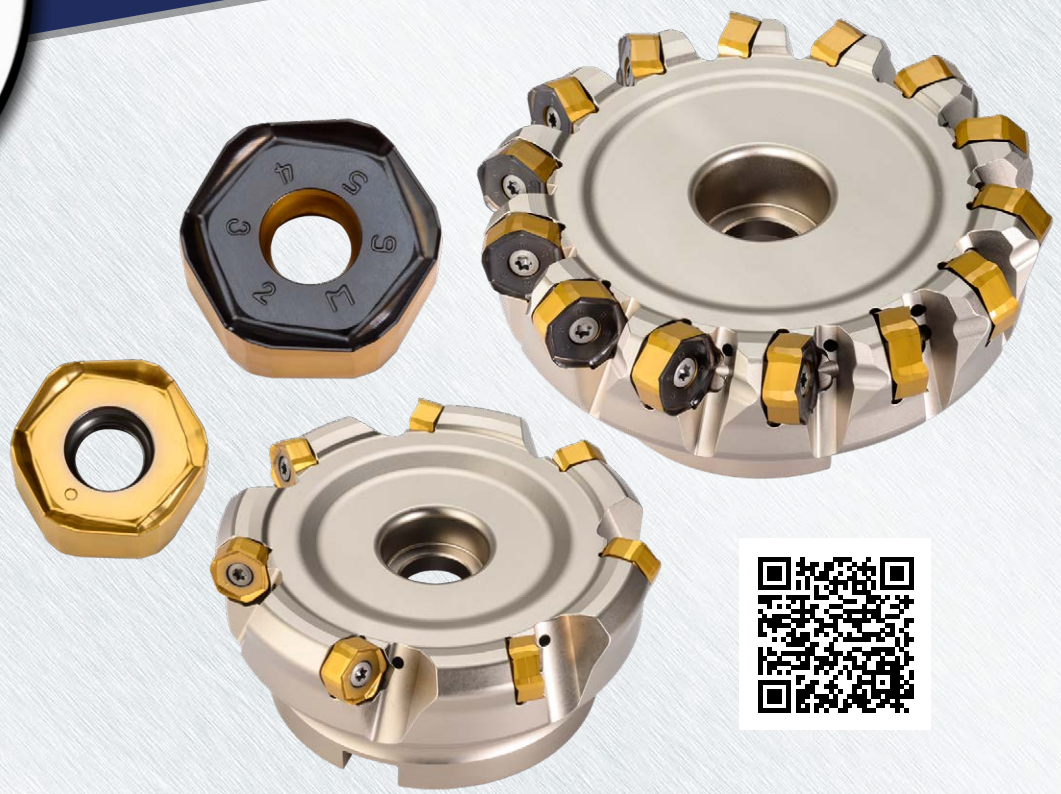

Cutter Series (Depth of Cut):
HN5D / HN6D (.11)
HN5G / HN6G (.20)

Insert Series:
HNGU06 / HNMU06
HNGU10 / HNMU10

Diameter Range:
1.50" - 10.00"
40.00 - 250.00mm

Lead Angle:
45°

Materials:
Iron, Steel, Stainless Steel, Hi-Temp Alloys, Titanium

Robust 45° Face Mill with 12-Edge Economy

Ingersoll's new DiPosHexa 45° Face Mill line is designed to improve productivity in heavy machining and roughing applications. 2-Side-Technology is utilized to produce economical 12-Corner inserts that blend edge strength with an aggressive rake face for efficient chip formation and evacuation. Face pressure and heat generation is minimized with the insert's short integrated wiper length contact and the cutter's concave face design.

Features & Benefits:

- Reinforced cutting edge boasts high feed rate potential
- High radial pocket incline promotes utmost chip evacuation and fine pitch cutter design for maximized productivity
- Helical cutting edges promote smooth machining
- Unequally spaced insert placement aids to diffuse vibration
- Integrated wiper flats produce 32-63 Ra surface finishes
- Ideal for steels and iron!

Member IMC Group Ingersoll Cutting Tools

FEATURES

High incline pocket design

- Produces tightly curled chips
- Directs chips out efficiently
- Accommodates fine pitch designs

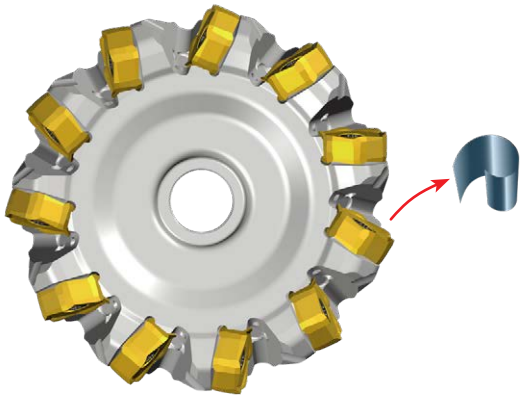

Unequal insert spacing minimizes vibration

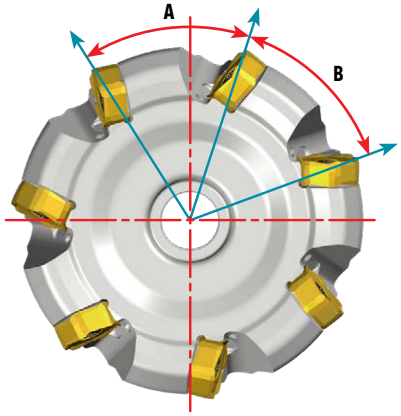

Integrated wiper flats produce 32-63 Ra surface finishes

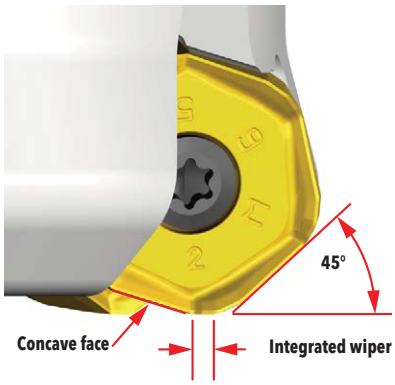

DIPOSHEXA™ 06 SERIES HN5D, HN6D

45° FACE MILL (6MM INSERT)

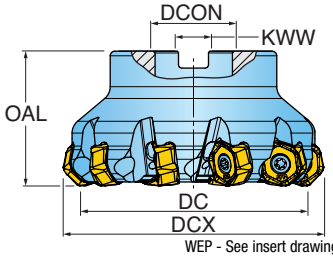

WEP - See insert drawing for wiper options.

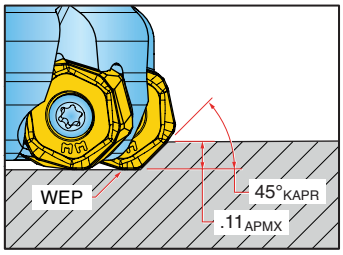

INCH

Part Number	DC Cutting Dia.	DCX Cutting Diameter Max.	OAL Overall Length	ZEFF Eff. Teeth	DCON Shank Dia.	KWW Keyway	CSP Coolant
HN6D-15R01	1.500	1.88	1.750	4	0.500	0.250	Yes
HN5D-20R01	2.000	2.38	1.750	6	0.750	0.312	Yes
HN6D-20R01	2.000	2.38	1.750	4	0.750	0.312	Yes
HN5D-25R01	2.500	2.89	1.750	7	1.000	0.375	Yes
HN6D-25R01	2.500	2.89	1.750	5	1.000	0.375	Yes
HN5D-30R01	3.000	3.39	1.750	10	1.000	0.375	Yes
HN6D-30R01	3.000	3.39	1.750	6	1.000	0.375	Yes
HN5D-40R01	4.000	4.39	2.375	12	1.500	0.625	Yes
HN6D-40R01	4.000	4.39	2.375	7	1.500	0.625	Yes
HN5D-50R01	5.000	5.39	2.375	16	1.500	0.625	Yes
HN6D-50R01	5.000	5.39	2.375	10	1.500	0.625	Yes
HN5D-60R01	6.000	6.39	2.375	20	1.500	0.625	No
HN6D-60R01	6.000	6.39	2.375	12	1.500	0.625	No

METRIC

Part Number	DC Cutting Dia.	DCX Cutting Diameter Max.	OAL Overall Length	ZEFF Eff. Teeth	DCON Shank Dia.	KWW Keyway	DBC Bolt Circle Dia.	CSP Coolant
HN6D040R00	40.00 mm	50.9 mm	40.00 mm	4	16.000 mm	8.40 mm	-	Yes
HN5D050R00	50.00 mm	60.9 mm	40.00 mm	6	22.000 mm	10.40 mm	-	Yes
HN6D050R00	50.00 mm	60.9 mm	40.00 mm	4	22.000 mm	10.40 mm	-	Yes
HN5D063R00	63.00 mm	73.9 mm	40.00 mm	7	22.000 mm	10.40 mm	-	Yes
HN6D063R00	63.00 mm	73.9 mm	40.00 mm	5	22.000 mm	10.40 mm	-	Yes
HN5D080R00	80.00 mm	90.9 mm	50.00 mm	10	27.000 mm	12.40 mm	-	Yes
HN6D080R00	80.00 mm	90.9 mm	50.00 mm	6	27.000 mm	12.40 mm	-	Yes
HN5D100R00	100.00 mm	110.9 mm	55.00 mm	12	32.000 mm	14.40 mm	-	Yes
HN6D100R00	100.00 mm	110.9 mm	55.00 mm	7	32.000 mm	14.40 mm	-	Yes
HN5D125R00	125.00 mm	135.9 mm	63.00 mm	16	40.000 mm	16.40 mm	-	Yes
HN6D125R00	125.00 mm	135.9 mm	63.00 mm	10	40.000 mm	16.40 mm	-	Yes
HN5D160R00	160.00 mm	170.9 mm	63.00 mm	20	40.000 mm	16.40 mm	66.7 mm	No
HN6D160R00	160.00 mm	170.9 mm	63.00 mm	12	40.000 mm	16.40 mm	66.7 mm	No

DIPOSHEXA™ 06 INSERTS

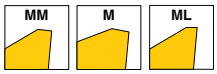

HNGU06_M

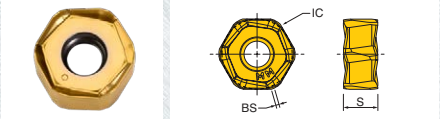

HNGU06_MM

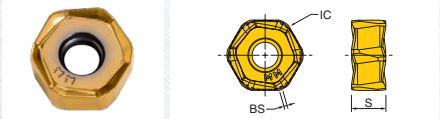

HNGU06_ML

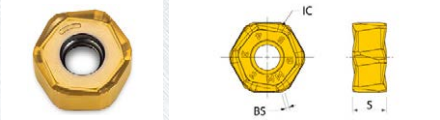

HNMU06_ANN

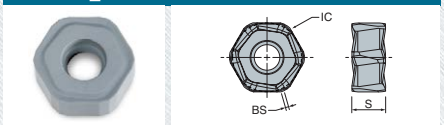

Part Number	Application	BS Wiper Length	IC Inscribed Circle Dia.	S Thickness	NOI Number of Indexes	IH Insert Hand	Grade	IN2505	IN2510	IN2530	IN6537	IN71N
HNGU0605ANTR-M	Medium Roughing	0.023	0.551	0.264	12	Right		•	•		•	
HNGU0605ANTR-MM	Medium, Pos. Rake Angle	0.047	0.551	0.264	12	Right		•	•		•	
HNGU0605ANR-ML	SS / Hi Temp / Ti	0.039	0.551	0.264	12	Right		•		•		
HNMU0605ANN	SiN for Iron	0.039	0.551	0.213	12	Right						•

DIPOSHEXA™ 10 SERIES HN5G, HN6G

45° FACE MILL (10MM INSERT)

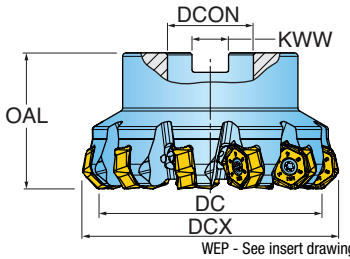

WEP - See insert drawing for wiper options.

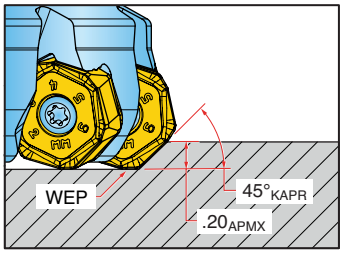

INCH

Part Number	DC Cutting Dia.	DCX Cutting Diameter Max.	OAL Overall Length	ZEFF Eff. Teeth	DCON Shank Dia.	KWW Keyway	DBC Bolt Circle	CSP Coolant
HN5G-25R01	2.500	3.03	1.750	7	1.000	0.375	-	Yes
HN6G-25R01	2.500	3.03	1.750	5	1.000	0.375	-	Yes
HN5G-30R01	3.000	3.53	1.750	9	1.000	0.375	-	Yes
HN6G-30R01	3.000	3.53	1.750	6	1.000	0.375	-	Yes
HN5G-40R01	4.000	4.53	2.375	11	1.500	0.625	-	Yes
HN6G-40R01	4.000	4.53	2.375	7	1.500	0.625	-	Yes
HN5G-50R01	5.000	5.52	2.375	14	1.500	0.625	-	Yes
HN6G-50R01	5.000	5.52	2.375	8	1.500	0.625	-	Yes
HN5G-60R01	6.000	6.52	2.375	16	1.500	0.625	-	No
HN6G-60R01	6.000	6.52	2.375	10	1.500	0.625	-	No
HN5G-80R01	8.000	8.52	2.375	21	2.500	1.000	4.00"	No
HN6G-80R01	8.000	8.52	2.375	14	2.500	1.000	4.00"	No
HN5G-10R01	10.000	10.53	2.375	26	2.500	1.000	4.00"	No
HN6G-10R01	10.000	10.53	2.375	16	2.500	1.000	4.00"	No

METRIC

Part Number	DC Cutting Dia.	DCX Cutting Diameter Max.	OAL Overall Length	ZEFF Eff. Teeth	DCON Shank Dia.	KWW Keyway	DBC Bolt Circle Dia.	CSP Coolant
HN5G063R00	63.00 mm	77.5 mm	50.00 mm	7	22.000 mm	10.40 mm	-	Yes
HN6G063R00	63.00 mm	77.5 mm	50.00 mm	5	22.000 mm	10.40 mm	-	Yes
HN5G080R00	80.00 mm	94.5 mm	50.00 mm	9	27.000 mm	12.40 mm	-	Yes
HN6G080R00	80.00 mm	94.5 mm	50.00 mm	6	27.000 mm	12.40 mm	-	Yes
HN5G100R00	100.00 mm	114.5 mm	50.00 mm	11	32.000 mm	14.40 mm	-	Yes
HN6G100R00	100.00 mm	114.5 mm	50.00 mm	7	32.000 mm	14.40 mm	-	Yes
HN5G125R00	125.00 mm	139.5 mm	63.00 mm	14	40.000 mm	16.40 mm	-	Yes
HN6G125R00	125.00 mm	139.5 mm	63.00 mm	8	40.000 mm	16.40 mm	-	Yes
HN5G160R00	160.00 mm	174.5 mm	63.00 mm	16	40.000 mm	16.40 mm	66.7 mm	No
HN6G160R00	160.00 mm	174.5 mm	63.00 mm	10	40.000 mm	16.40 mm	66.7 mm	No
HN5G200R00	200.00 mm	214.5 mm	63.00 mm	21	60.000 mm	25.70 mm	101.6 mm	No
HN6G200R00	200.00 mm	214.5 mm	63.00 mm	14	60.000 mm	25.70 mm	101.6 mm	No
HN5G250R00	250.00 mm	264.5 mm	63.00 mm	26	60.000 mm	25.70 mm	101.6 mm	No
HN6G250R00	250.00 mm	264.5 mm	63.00 mm	16	60.000 mm	25.70 mm	101.6 mm	No

DIPOSHEXA™ 10 INSERTS

HNGU10_M

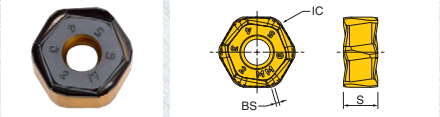

HNGU10_MM

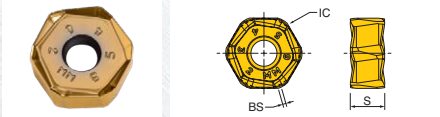

HNGU10_HR

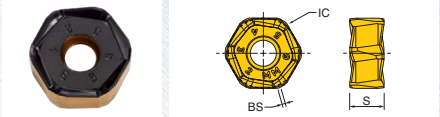

HNGU10_ML

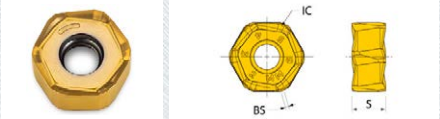

HNMU10_ANN

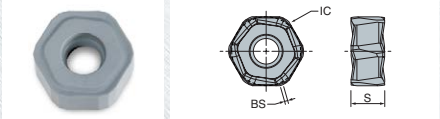

Part Number	Application	BS Wiper Length	IC Inscribed Circle Dia.	S Thickness	NOI Number of Indexes	IH Insert Hand	Grade	IN2505	IN2510	IN2530	IN6515	IN6537	IN71N
HNGU1007ANTR-M	Medium Roughing	0.039	0.752	0.327	12	Right		•				•	
HNGU1007ANTR-MM	Medium, Pos. Rake Angle	0.063	0.752	0.327	12	Right			•			•	
HNGU1007ANTR-HR	Heavy-Duty	0.039	0.752	0.327	12	Right					•	•	
HNGU1007ANR-ML	SS / Hi Temp / Ti	0.039	0.752	0.327	12	Right		•		•			
HNMU1007ANN	SiN for Iron	0.047	0.752	0.248	12	Right							•

DIPOSHEXA™ 06/10 HARDWARE

INCH

	Screw	Driver Handle	Torx Driver Blade	Retention Bolt	**OPTIONAL** Coolant Retention Bolt	**OPTIONAL** Torque Driver Handle	**OPTIONAL** Torque Driver Bit	**OPTIONAL** Preset Torque Bit
HN6D-15R01	SM40-100-R0	DS-A00T	DS-T156B1	SD-04-48	-	DS-A00-.25-T	DS-T15B1	DT-35-.25
HN5D-20R01	SM40-100-R0	DS-A00T	DS-T156B1	SD-06-47	SD-06-A6	DS-A00-.25-T	DS-T15B1	DT-35-.25
HN6D-20R01	SM40-100-R0	DS-A00T	DS-T156B	SD-06-47	SD-06-A6	DS-A00-.25-T	DS-T15B1	DT-35-.25
HN5D-25R01	SM40-100-R0	DS-A00T	DS-T156B	SD-08-47	SD08-C9	DS-A00-.25-T	DS-T15B1	DT-35-.25
HN6D-25R01	SM40-100-R0	DS-A00T	DS-T156B	SD-08-47	SD08-C9	DS-A00-.25-T	DS-T15B1	DT-35-.25
HN5D-30R01	SM40-100-R0	DS-A00T	DS-T156B	SD-08-47	SD08-C9	DS-A00-.25-T	DS-T15B1	DT-35-.25
HN6D-30R01	SM40-100-R0	DS-A00T	DS-T156B	SD-08-47	SD08-C9	DS-A00-.25-T	DS-T15B1	DT-35-.25
HN5D-40R01	SM40-100-R0	DS-A00T	DS-T156B	SD-12-82	SD-12-99	DS-A00-.25-T	DS-T15B1	DT-35-.25
HN6D-40R01	SM40-100-R0	DS-A00T	DS-T156B	SD-12-82	SD-12-99	DS-A00-.25-T	DS-T15B1	DT-35-.25
HN5D-50R01	SM40-100-R0	DS-A00T	DS-T156B	SD-12-82	SD-12-99	DS-A00-.25-T	DS-T15B1	DT-35-.25
HN6D-50R01	SM40-100-R0	DS-A00T	DS-T156B	SD-12-82	SD-12-99	DS-A00-.25-T	DS-T15B1	DT-35-.25
HN5D-60R01	SM40-100-R0	DS-A00T	DS-T156B	SD-12-82	-	DS-A00-.25-T	DS-T15B1	DT-35-.25
HN6D-60R01	SM40-100-R0	DS-A00T	DS-T156B	SD-12-82	-	DS-A00-.25-T	DS-T15B1	DT-35-.25
HN5G-25R01	SM50-130-R0	DS-A00T	DS-T206B	SD-08-47	SD08-C9	DS-A00-.25-T	DS-T20B1	DT-44-.25
HN6G-25R01	SM50-130-R0	DS-A00T	DS-T206B	SD-08-47	SD08-C9	DS-A00-.25-T	DS-T20B1	DT-44-.25
HN5G-30R01	SM50-130-R0	DS-A00T	DS-T206B	SD-08-47	SD08-C9	DS-A00-.25-T	DS-T20B1	DT-44-.25
HN6G-30R01	SM50-130-R0	DS-A00T	DS-T206B	SD-08-47	SD08-C9	DS-A00-.25-T	DS-T20B1	DT-44-.25
HN5G-40R01	SM50-130-R0	DS-A00T	DS-T206B	SD-12-89	SD-12-99	DS-A00-.25-T	DS-T20B1	DT-44-.25
HN6G-40R01	SM50-130-R0	DS-A00T	DS-T206B	SD-12-89	SD-12-99	DS-A00-.25-T	DS-T20B1	DT-44-.25
HN5G-50R01	SM50-130-R0	DS-A00T	DS-T206B	SD-12-89	SD-12-99	DS-A00-.25-T	DS-T20B1	DT-44-.25
HN6G-50R01	SM50-130-R0	DS-A00T	DS-T206B	SD-12-89	SD-12-99	DS-A00-.25-T	DS-T20B1	DT-44-.25
HN5G-60R01	SM50-130-R0	DS-A00T	DS-T206B	SD-12-89	SD-12-99	DS-A00-.25-T	DS-T20B1	DT-44-.25
HN6G-60R01	SM50-130-R0	DS-A00T	DS-T206B	SD-12-89	SD-12-99	DS-A00-.25-T	DS-T20B1	DT-44-.25
HN5G-80R01	SM50-130-R0	DS-A00T	DS-T206B	-	-	DS-A00-.25-T	DS-T20B1	DT-44-.25
HN6G-80R01	SM50-130-R0	DS-A00T	DS-T206B	-	-	DS-A00-.25-T	DS-T20B1	DT-44-.25
HN5G-10R01	SM50-130-R0	DS-A00T	DS-T206B	-	-	DS-A00-.25-T	DS-T20B1	DT-44-.25
HN6G-10R01	SM50-130-R0	DS-A00T	DS-T206B	-	-	DS-A00-.25-T	DS-T20B1	DT-44-.25

Note: Insert screw torque for Carbide is 35 in lbs. Insert screw torque for SiN is 30 in lbs.

DIPOSHEXA™ 06/10 HARDWARE

METRIC

	Screw	Driver Handle	Torx Driver Blade	Retention Bolt	**OPTIONAL** Torque Driver Handle	**OPTIONAL** Torque Driver Bit	**OPTIONAL** Preset Torque Bit
HN6D040R00	SM40-100-R0	DS-A00T	DS-T156B	ISO4762M8x25-12.9	DS-A00-.25-T	DS-T15B1	DT-35-.25
HN5D050R00	SM40-100-R0	DS-A00T	DS-T156B	ISO4762M10x25-12.9	DS-A00-.25-T	DS-T15B1	DT-35-.25
HN6D050R00	SM40-100-R0	DS-A00T	DS-T156B	ISO4762M10x25-12.9	DS-A00-.25-T	DS-T15B1	DT-35-.25
HN5D063R00	SM40-100-R0	DS-A00T	DS-T156B	ISO4762M10x25-12.9	DS-A00-.25-T	DS-T15B1	DT-35-.25
HN6D063R00	SM40-100-R0	DS-A00T	DS-T156B	ISO4762M10x25-12.9	DS-A00-.25-T	DS-T15B1	DT-35-.25
HN5D080R00	SM40-100-R0	DS-A00T	DS-T156B	ISO4762M12x35-12.9	DS-A00-.25-T	DS-T15B1	DT-35-.25
HN6D080R00	SM40-100-R0	DS-A00T	DS-T156B	ISO4762M12x35-12.9	DS-A00-.25-T	DS-T15B1	DT-35-.25
HN5D100R00	SM40-100-R0	DS-A00T	DS-T156B	ISO4762M16x30-12.9	DS-A00-.25-T	DS-T15B1	DT-35-.25
HN6D100R00	SM40-100-R0	DS-A00T	DS-T156B	ISO4762M16x30-12.9	DS-A00-.25-T	DS-T15B1	DT-35-.25
HN5D125R00	SM40-100-R0	DS-A00T	DS-T156B	ISO4762M20x40-12.9	DS-A00-.25-T	DS-T15B1	DT-35-.25
HN6D125R00	SM40-100-R0	DS-A00T	DS-T156B	ISO4762M20x40-12.9	DS-A00-.25-T	DS-T15B1	DT-35-.25
HN5D160R00	SM40-100-R0	DS-A00T	DS-T156B	-	DS-A00-.25-T	DS-T15B1	DT-35-.25
HN6D160R00	SM40-100-R0	DS-A00T	DS-T156B	-	DS-A00-.25-T	DS-T15B1	DT-35-.25
HN5G063R00	SM50-130-R0	DS-A00T	DS-T206B	ISO4762M10x25-12.9	DS-A00-.25-T	DS-T20B1	DT-44-.25
HN6G063R00	SM50-130-R0	DS-A00T	DS-T206B	ISO4762M10x25-12.9	DS-A00-.25-T	DS-T20B1	DT-44-.25
HN5G080R00	SM50-130-R0	DS-A00T	DS-T206B	ISO4762M12x35-12.9	DS-A00-.25-T	DS-T20B1	DT-44-.25
HN6G080R00	SM50-130-R0	DS-A00T	DS-T206B	ISO4762M12x35-12.9	DS-A00-.25-T	DS-T20B1	DT-44-.25
HN5G100R00	SM50-130-R0	DS-A00T	DS-T206B	ISO4762M16x30-12.9	DS-A00-.25-T	DS-T20B1	DT-44-.25
HN6G100R00	SM50-130-R0	DS-A00T	DS-T206B	ISO4762M16x30-12.9	DS-A00-.25-T	DS-T20B1	DT-44-.25
HN5G125R00	SM50-130-R0	DS-A00T	DS-T206B	ISO4762M20x40-12.9	DS-A00-.25-T	DS-T20B1	DT-44-.25
HN6G125R00	SM50-130-R0	DS-A00T	DS-T206B	ISO4762M20x40-12.9	DS-A00-.25-T	DS-T20B1	DT-44-.25
HN5G160R00	SM50-130-R0	DS-A00T	DS-T206B	-	DS-A00-.25-T	DS-T20B1	DT-44-.25
HN6G160R00	SM50-130-R0	DS-A00T	DS-T206B	-	DS-A00-.25-T	DS-T20B1	DT-44-.25
HN5G200R00	SM50-130-R0	DS-A00T	DS-T206B	-	DS-A00-.25-T	DS-T20B1	DT-44-.25
HN6G200R00	SM50-130-R0	DS-A00T	DS-T206B	-	DS-A00-.25-T	DS-T20B1	DT-44-.25
HN5G250R00	SM50-130-R0	DS-A00T	DS-T206B	-	DS-A00-.25-T	DS-T20B1	DT-44-.25
HN6G250R00	SM50-130-R0	DS-A00T	DS-T206B	-	DS-A00-.25-T	DS-T20B1	DT-44-.25

Note: Insert screw torque for Carbide is 35 in lbs. Insert screw torque for SiN is 30 in lbs.

DIPOSHEXA™ 06 OPERATING GUIDELINES

Chip Thinning

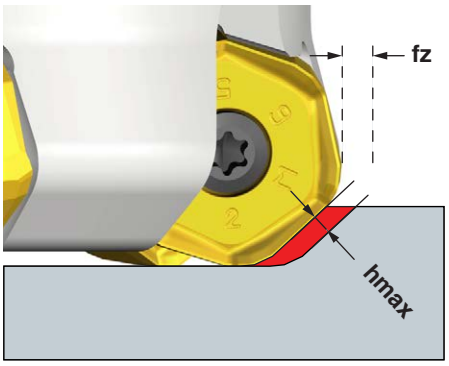

* Chip Thinning Calculator is recommended to ensure hmax is greater than .003"

Materials				Vc Cutting Speed SFM	fz* Feed/Tooth (inch)	Harder <----------> Tougher					Coolant
						Ceramic	Carbide				
ISO	Mat'l Group #VDI 3323	Type	Examples			IN71N	IN2510	IN2505	IN2530	IN6537	
P	1 - 5	Non-alloy Steel	1018, A36, 1045, A572, 1070	400-1000	.003-.008						
	6 - 9	Low-alloy Steel	4140, 4340, P20, 8620, 300M	350-700				3	2	1	No
	10 - 11	High-alloy Steel	H13, A2, D2, M2, T1	300-600							
M	12 - 13	Stainless Steel (Ferritic & Martensitic)	410, 416, 440	350-600	.003-.007			2	1	3	Yes
	14	Stainless Steel (Austenitic)	303, 304, 316, 15-5, 17-4	300-550							May not be required at high speeds
K	15 - 16	Gray Cast Iron	CLS. 20, 30, 45	500-1000	.003-.008		1	2		3	No
				1800-3000		1					
	17 - 18	Nodular Cast Iron	60-40-18, 100-70-03	400-800			1	2		3	
				1500-2500		1					
S	31 - 35	High-Temp Alloys	Inconel, Hastelloy, Nimonic, Monel	65-150	.003-.006			1	2		Yes
	36 - 37	Titanium Alloys	6Al-4V, 5Al-5Mo-5V-3Cr	85-200				2	1		

Note: Feed and speed recommendations are starting operating parameters. They are only guidelines from which further optimization should take place. Operating parameters are influenced by many machining variables. These variables may cause for reductions in feeds and speed or dramatic increases. Additionally, DOC and WOC may need to be revised to optimize the tools performance.

DIPOSHEXA™ 10 OPERATING GUIDELINES

Chip Thinning

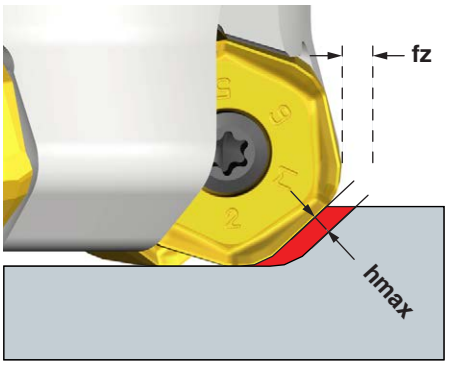

* Chip Thinning Calculator is recommended to ensure hmax is greater than .003"

Materials				Vc Cutting Speed SFM	fz* Feed/Tooth (inch)	Harder <----------> Tougher						Coolant
						Ceramic	Carbide					
ISO	Mat'l Group #VDI 3323	Type	Examples			IN71N	IN2510	IN6515	IN2505	IN2530	IN6537	
P	1 - 5	Non-alloy Steel	1018, A36, 1045, A572, 1070	400-1000	.003-.010							
	6 - 9	Low-alloy Steel	4140, 4340, P20, 8620, 300M	350-700					3	2	1	No
	10 - 11	High-alloy Steel	H13, A2, D2, M2, T1	300-600								
M	12 - 13	Stainless Steel (Ferritic & Martensitic)	410, 416, 440	350-600	.003-.008				2	1	3	Yes
	14	Stainless Steel (Austenitic)	303, 304, 316, 15-5, 17-4	300-550								May not be required at high speeds
K	15 - 16	Gray Cast Iron	CLS. 20, 30, 45	500-1000	.003-.010		1		2		3	No
				1800-3000		1						
	17 - 18	Nodular Cast Iron	60-40-18, 100-70-03	400-800			2	1	3		4	
				1500-2500		1						
S	31 - 35	High-Temp Alloys	Inconel, Hastelloy, Nimonic, Monel	65-150	.003-.006				1	2		Yes
	36 - 37	Titanium Alloys	6Al-4V, 5Al-5Mo-5V-3Cr	85-200					2	1		

Note: Feed and speed recommendations are starting operating parameters. They are only guidelines from which further optimization should take place. Operating parameters are influenced by many machining variables. These variables may cause for reductions in feeds and speed or dramatic increases. Additionally, DOC and WOC may need to be revised to optimize the tools performance.