NPA UPDATE

Member IMC Group Ingersoll Cutting Tools

New Product Announcement

HOLEMAKING

GOLDTWIN™

Diameter Range
1.062–1.875"
26.0–50.0 mm

Modular Bodies
3xD, 5xD, 7xD
Universal Flat with Side Coolant Port

Geometries
TPC-C (Self-Centering)

Outboard Inserts
SPGX-WG (Wiper)

Grade
IN2505

Materials
- Steel
- Stainless Steel
- Cast Iron
- Non-Ferrous
- High-Temp Alloys
- Hardened Steel

Unique Modular Drilling System for Wide Range of Diameters and Depths

- » Increased feed rates achieved with 2-effective insert design
- » Self-centering geometry allows for improved straightness
- » Wiper insert allows for phenomenal surface finish
- » Guide pads greatly improve stability during machining
- » Modular design reduces inventory

3xD

5xD

7xD

See it in action! »

WINSFEED™ ADVANCED MACHINING

ingersoll-imc.com

Unique Modular Drilling System for a Wide Range of Diameters and Depths

Ingersoll is proud to introduce **GoldTwin**, part of the WinSFeed family of high-quality holemaking products.

GoldTwin is a modular, indexable drill that provides superior machining and excellent hole quality for diameters starting at 1.023" (26.0 mm) and above.

Inch and metric diameter-specific modular heads can be mounted on a wide range of L/D bodies, which are designed to improve productivity and reduce overall tooling costs.

The center of the modular head utilizes a uniquely designed tip (TPC-C) that features self-centering geometry and drastically improves hole straightness.

Additionally, the outboard station inserts include a wiper area (SPGX-WG) and dedicated guide pads for vastly improved surface finishes.

Features & Benefits

- Unique self-centering geometry improves hole straightness
- Excellent surface finish due to SPGX-WG insert with wiper area
- Improved machining stability due to dedicated guide pads
- Modular system allows for the machining of 3xD, 5xD, and 7xD applications

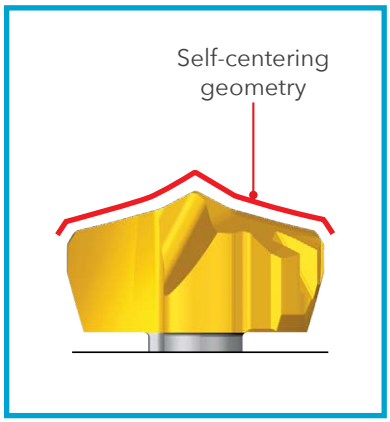

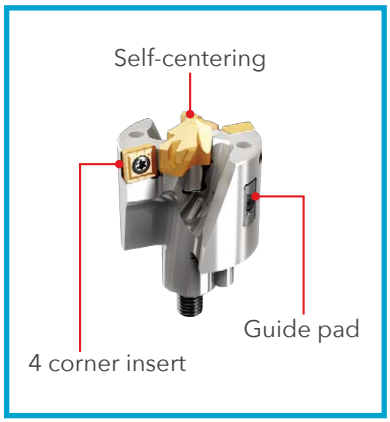

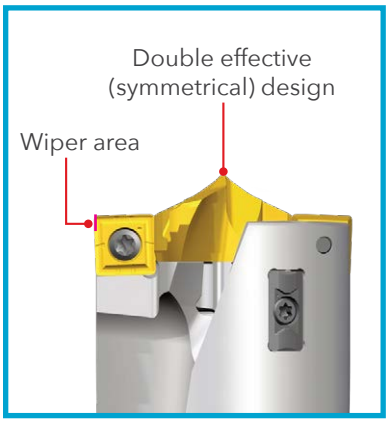

Modular Head Replacement Instructions

1. Remove both outer inserts, then remove the center drill head. Note: when clamping, go in the reverse order.

2. Use a wrench to turn the screw counterclockwise to remove the modular head.

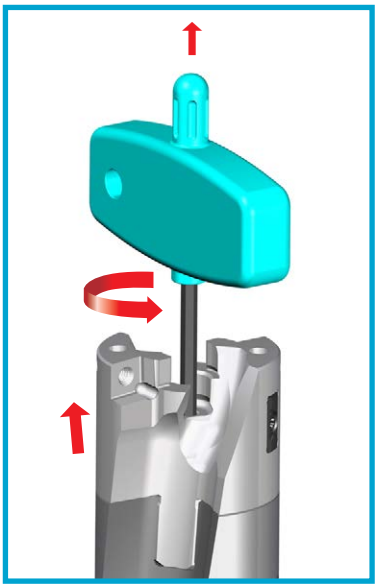

3. Insert the setting gauge into the bottom of the disconnected modular head.

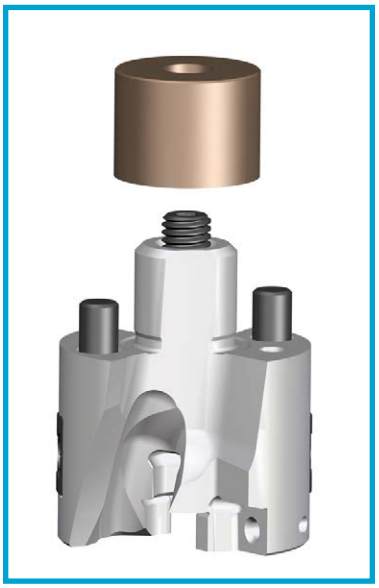

4. Rotate the screw to adjust to the same height as the setting gauge.

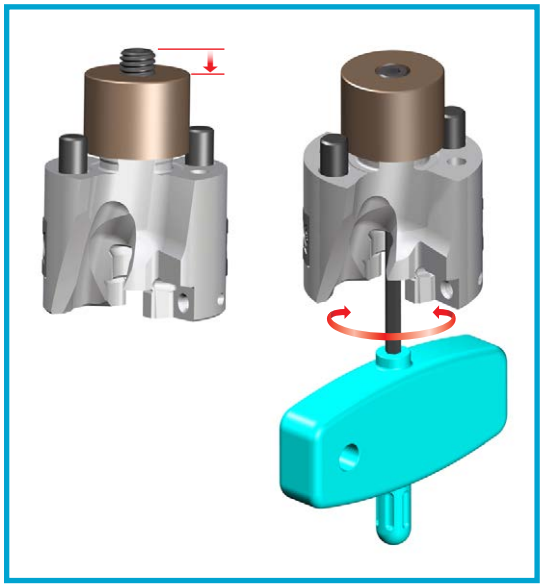

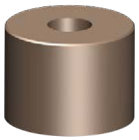

Setting gauge

Drill Diameter	Part Number
D26-D29	SG-CD26-29-TP
D30-D35	SG-CD30-35-TP
D36-D39	SG-CD36-39-TP
D40-D43	SG-CD40-43-TP
D44-D50	SG-CD44-50-TP

5. Remove the height adjusted modular head from the setting gauge and attach it to the holder.

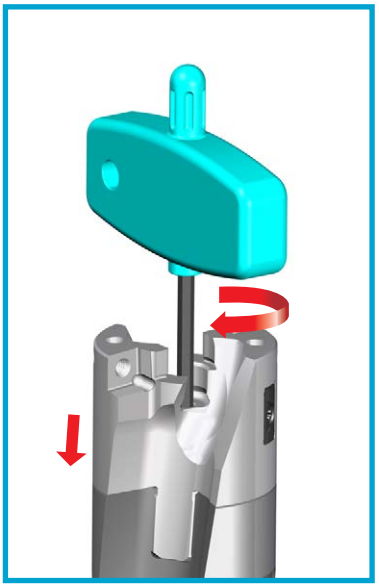

Modular Head Disassembly - Center Tip (TPC-C) Damage

If the modular head cannot be unclamped due to center drill damage, insert the wrench into the rear section of the shank. Next, turn it clockwise to disassemble the modular head.

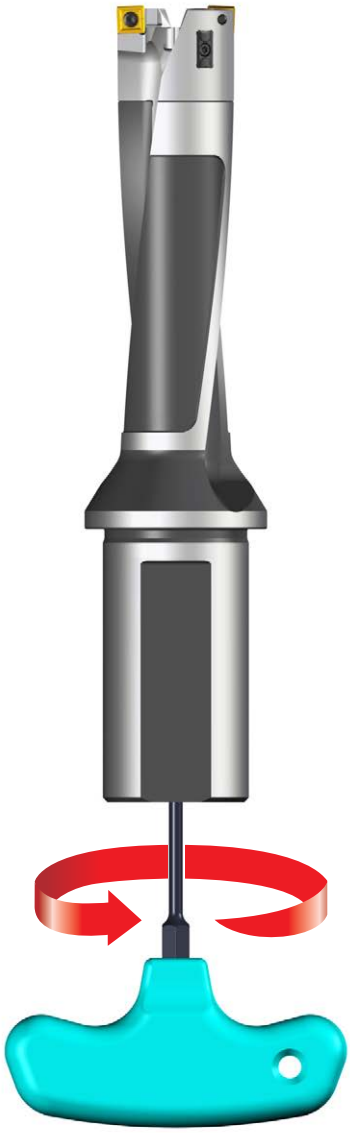

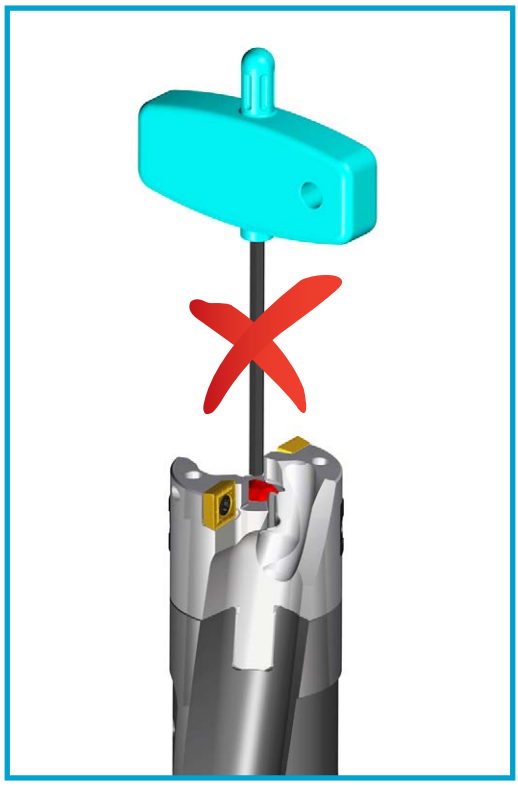

Damaged center drill

- Disassembling wrench and handle are included with the modular drill holder.

Drilling Coolant

3xD • Series W_Y

UNIVERSAL SHANK

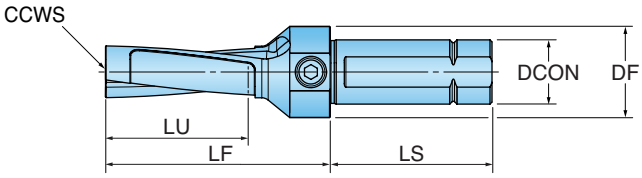

Part Number	CCWS Connection Code Workpiece Side	LU Usable Length	LF Functional Length	LS Shank Length	DCON Shank Diameter	DF Flange Diameter	ZEFF Effective Teeth
INCH							
W0318YFSA60	YF (0.409)	2.36	4.34	3.16	1.25	1.77	2
W0318YGSA64	YG (0.441)	2.52	4.58	3.16	1.25	1.77	2
W0318YHSA69	YH (0.472)	2.72	4.78	3.16	1.25	2.17	2
W0318YKSA78	YK (0.535)	3.07	5.36	3.16	1.25	2.17	2
W0318YMSA86	YM (0.598)	3.39	5.80	3.16	1.25	2.17	2
W0381YNSA91	YN (0.630)	3.58	6.04	3.16	1.50	2.36	2
W0381YQSA99	YQ (0.693)	3.90	6.53	3.16	1.50	2.36	2
W0381YRSA104	YR (0.724)	4.09	6.71	3.16	1.50	2.36	2

Drilling Coolant

5xD • Series W_Y

UNIVERSAL SHANK

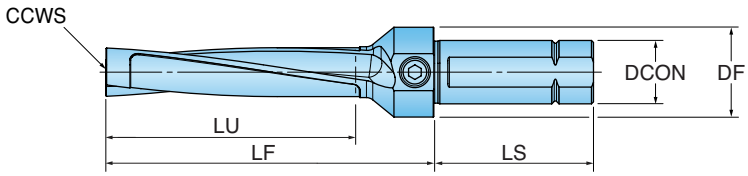

Part Number	CCWS Connection Code Workpiece Side	LU Usable Length	LF Functional Length	LS Shank Length	DCON Shank Diameter	DF Flange Diameter	ZEFF Effective Teeth
INCH							
W0318YFSA114	YF (0.409)	4.49	6.46	3.16	1.25	1.77	2
W0318YGSA122	YG (0.441)	4.80	6.87	3.16	1.25	1.77	2
W0318YHSA131	YH (0.472)	5.16	7.22	3.16	1.25	2.17	2
W0318YKSA148	YK (0.535)	5.83	8.11	3.16	1.25	2.17	2
W0318YMSA164	YM (0.598)	6.46	8.87	3.16	1.25	2.17	2
W0381YNSA173	YN (0.630)	6.81	9.27	3.16	1.50	2.36	2
W0381YQSA189	YQ (0.693)	7.44	10.07	3.16	1.50	2.36	2
W0381YRSA198	YR (0.724)	7.79	10.41	3.16	1.50	2.36	2

Drilling Coolant

7xD • Series W_Y

UNIVERSAL SHANK

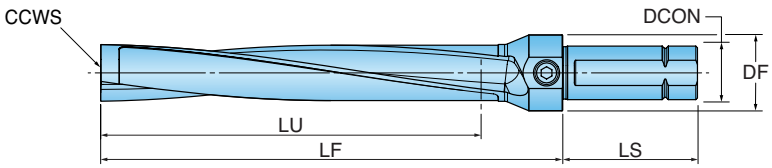

Part Number	CCWS Connection Code Workpiece Side	LU Usable Length	LF Functional Length	LS Shank Length	DCON Shank Diameter	DF Flange Diameter	ZEFF Effective Teeth
INCH							
W0318YFSA168	YF (0.409)	6.61	8.59	3.16	1.25	1.77	2
W0318YGSA180	YG (0.441)	7.09	9.15	3.16	1.25	1.77	2
W0318YHSA193	YH (0.472)	7.60	9.67	3.16	1.25	2.17	2
W0318YKSA218	YK (0.535)	8.58	10.87	3.16	1.25	2.17	2
W0318YMSA242	YM (0.598)	9.53	11.94	3.16	1.25	2.17	2
W0381YNSA255	YN (0.630)	10.04	12.50	3.16	1.50	2.36	2
W0381YQSA279	YQ (0.693)	10.98	13.62	3.16	1.50	2.36	2
W0381YRSA292	YR (0.724)	11.49	14.11	3.16	1.50	2.36	2

Hardware • Series W_Y (3xD, 5xD, and 7xD)

DISASSEMBLY WRENCH AND HANDLE

Part Number	Driver Blade	Driver Handle
W0318YFSA60	BLDH-W2.5X210	SW6-T SHORT
W0318YGSA64	BLDH-W2.5X210	SW6-T SHORT
W0318YHSA69	BLDH-W2.5X210	SW6-T SHORT
W0318YKSA78	BLDH-W2.5X210	SW6-T SHORT
W0318YMSA86	BLDH-W2.5X210	SW6-T SHORT
W0381YNSA91	BLDH-W3.0X225	SW6-T SHORT
W0381YQSA99	BLDH-W4.0X255	SW6-T SHORT
W0381YRSA104	BLDH-W4.0X255	SW6-T SHORT
W0318YFSA114	BLDH-W2.5X280	SW6-T SHORT
W0318YGSA122	BLDH-W2.5X280	SW6-T SHORT
W0318YHSA131	BLDH-W2.5X280	SW6-T SHORT
W0318YKSA148	BLDH-W2.5X280	SW6-T SHORT
W0318YMSA164	BLDH-W2.5X280	SW6-T SHORT
W0381YNSA173	BLDH-W3.0X310	SW6-T SHORT
W0381YQSA189	BLDH-W4.0X350	SW6-T SHORT
W0381YRSA198	BLDH-W4.0X350	SW6-T SHORT
W0318YFSA168	BLDH-W2.5X280	SW6-T SHORT
W0318YGSA180	BLDH-W2.5X280	SW6-T SHORT
W0318YHSA193	BLDH-W2.5X280	SW6-T SHORT
W0318YKSA218	BLDH-W2.5X280	SW6-T SHORT
W0318YMSA242	BLDH-W2.5X280	SW6-T SHORT
W0381YNSA255	BLDH-W3.0X310	SW6-T SHORT
W0381YQSA279	BLDH-W4.0X350	SW6-T SHORT
W0381YRSA292	BLDH-W4.0X350	SW6-T SHORT

Drilling Coolant

Series CD_Y

MODULAR DRILL HEADS

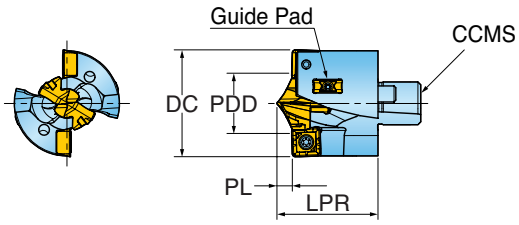

Part Number	DC Cutting Dia.	CCMS Conn. Code Machine Side	LPR Projection Length	PL Point Length	PDD Drill Point Dia.	Clamping Key	SSC Seat Size Code	Insert Center	Insert Outboard
INCH									
CD2690025YFR01	1.062	YF (0.409)	0.980	0.157	0.6260	KTD15-16-C	15	TPC1590R01-C	SPGX 06...WG
CD2860027YGR01	1.125	YG (0.441)	1.059	0.169	0.7047	KTD17-19-C	17	TPC1790R01-C	SPGX 06...WG
CD3015028YHR01	1.187	YH (0.472)	1.114	0.163	0.6654	KTD15-16-C	16	TPC1690R01-C	SPGX 07...WG
CD3175028YHR01	1.250	YH (0.472)	1.122	0.169	0.7047	KTD17-19-C	17	TPC1790R01-C	SPGX 07...WG
CD3493032YKR01	1.375	YK (0.535)	1.244	0.163	0.6654	KTD15-16-C	16	TPC1690R01-C	SPGX 09...WG
CD3810035YMR01	1.500	YM (0.598)	1.378	0.169	0.7047	KTD17-19-C	17	TPC1790R01-C	SPGX 11...WG
CD4130037YNR01	1.625	YN (0.630)	1.461	0.188	0.8228	KTD20-21-C	20	TPC2090R01-C	SPGX 11...WG
CD4445041YQR01	1.750	YQ (0.693)	1.606	0.208	0.9409	KTD22-23-C	23	TPC2390R01-C	SPGX 11...WG
CD4760042YRR01	1.875	YR (0.724)	1.665	0.201	0.9016	KTD22-23-C	22	TPC2290R01-C	SPGX 14...WG

*Does not include guide pads. Guide pads must be purchased separately.

Series TPC-C

SELF-CENTERING TIPS

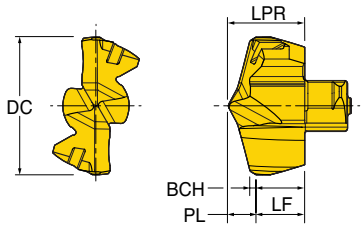

Part Number	DC Cutting Diameter INCH (MM)	SSC Seat Size Code	PL Point Length	LPR Projection Length	LF Functional Length	BCH Chamfer Length	Grade IN2505
TPC1590R01-C	0.6260 (15.90 mm)	15	0.125	0.344	0.219	0.028	•
TPC1690R01-C	0.6654 (16.90 mm)	16	0.131	0.366	0.235	0.028	•
TPC1790R01-C	0.7047 (17.90 mm)	17	0.138	0.390	0.252	0.028	•
TPC2090R01-C	0.8228 (20.90 mm)	20	0.157	0.457	0.300	0.028	•
TPC2290R01-C	0.9016 (22.90 mm)	22	0.170	0.502	0.333	0.028	•
TPC2390R01-C	0.9409 (23.90 mm)	23	0.176	0.525	0.348	0.028	•

Insert • SPGX-WG

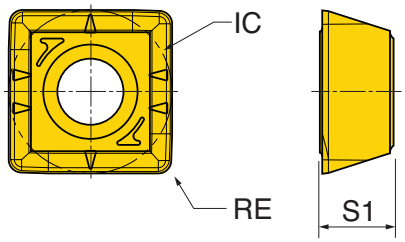

Part Number	IC Inscribed Circle Dia.	S1 Thickness (Overall)	RE Corner Radius	NOI Number of Indexes	Grade IN2505
INCH					
SPGX060204WG	0.239	0.094	0.016	4	•
SPGX07T308WG	0.316	0.156	0.031	4	•
SPGX090408WG	0.390	0.169	0.031	4	•
SPGX110408WG	0.457	0.189	0.031	4	•
SPGX140512WG	0.567	0.205	0.047	4	•

Guide Pad for CD Modular Heads

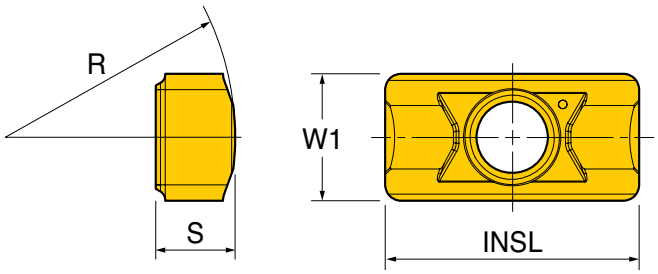

Part Number	W1 Guide Pad Width	S Thickness	INSL Guide Pad Length	R Radius
INCH				
PAD-G04-08	0.157	0.098	0.315	0.354

Hardware • Modular Drill Heads

Part Number	Differential Screw		SPGX Insert		Guide Pad	
	Screw 1	Driver 1	Screw 2	Driver 2	Screw 3	Driver 3
CD2690025YFR01	TDPS0512-T7	DS-T07S	TS22052I/HG	DS-T07S	SM20-043-00	DS-TP06S
CD2860027YGR01						
CD3015028YHR01			SM25-064-00	DS-T08S		
CD3175028YHR01						
CD3493032YKR01			SM35-088-60	DS-T10S		
CD3810035YMR01	TDPS0618-T8	DS-T08S	SM40-093-20	DS-T15S		
CD4130037YNR01						
CD4445041YQR01	TDPS0722-W3.0	DS-H03F				
CD4760042YRR01			SM50-122-50	DS-T20S		

Part Number	Setting Gauge
CD2690025YFR01	SG-CD26-29-TP
CD2860027YGR01	
CD3015028YHR01	SG-CD30-35-TP
CD3175028YHR01	
CD3493032YKR01	
CD3810035YMR01	SG-CD36-39-TP
CD4130037YNR01	SG-CD40-43-TP
CD4445041YQR01	SG-CD44-50-TP
CD4760042YRR01	

Operating Guidelines

ISO	Material		Condition	Tensile Strength RM (N/mm²)	Hard-ness HB	Matl. Group No.	Cutting Speed Vc (SFM)	Feed vs. Drill Diameter – IPR (inches/rev)				
								SPGX 06 1.023-1.102 26.0-28.0mm	SPGX 07 1.142-1.260 29.0-32.0mm	SPGX 09 1.300-1.417 33.0-36.0mm	SPGX 11 1.457-1.693 37.0-43.0mm	SPGX 11/14 1.732-1.969 44.0-50.0mm
P	Non-alloy steel and cast steel, free cutting steel	<0.25%C	Annealed	420	125	1	400-660	.008-.014	.010-.014	.010-.016	.010-.016	.011-.018
		≥0.25%C	Annealed	650	190	2						
		<0.55%C	Quenched/Tempered	850	250	3	430-630					
		≥0.55%C	Annealed	750	220	4						
			Quenched/Tempered	1000	300	5						
	Low alloy steel and cast steel (less than 5% alloying elements)		Annealed	600	200	6	330-660	.008-.013	.010-.013	.010-.014	.010-.014	.010-.016
			Quenched/Tempered	930	275	7						
				1000	300	8						
				1200	350	9						
	High alloy steel, cast steel, and tool steel		Annealed	680	200	10	330-530	.008-.013	.010-.013	.010-.014	.010-.014	.010-.016
			Quenched/Tempered	1100	325	11						
M	Stainless steel and cast stainless steel		Ferritic/Martensitic	680	200	12	265-460	.005-.009	.006-.009	.006-.010	.007-.011	.007-.012
			Martensitic	820	240	13						
			Austenitic	600	180	14						
K	Grey cast iron (GG)		Ferritic	-	180	15	330-825	.010-.018	.006-.012	.012-.020	.012-.020	.014-.022
			Pearlitic	-	260	16						
	Cast iron nodular (GGG)		Ferritic	-	160	17						
			Pearlitic	-	250	18						
	Malleable cast iron		Ferritic	-	130	19						
			Pearlitic	-	230	20						
N	Aluminum - wrought alloy		Not Cureable	-	60	21	530-860	.012-.020	.012-.020	.014-.022	.016-.024	.016-.024
			Cured	-	100	22						
	Aluminum-cast, alloyed	≤12% Si	Not Cureable	-	75	23						
			Cured	-	90	24						
		>12% Si	High Temperature	-	130	25						
	Copper alloys	>1% Pb	Free Cutting	-	110	26						
			Brass	-	90	27						
			Electrolitic Copper	-	100	28						
	Non-metallic		Duro/Fiber Plastics	-	-	29	.	.	.	.	.	
			Hard Rubber	-	-	30						
S	High temp alloys	Fe based	Annealed	-	200	31	100-200	.004-.006	.004-.007	.006-.008	.006-.009	.006-.009
			Cured	-	280	32	100-265					
		Ni or Co based	Annealed	-	250	33						
			Cured	-	350	34						
			Cast	-	320	35						
	Titanium, Ti alloys		-	Rm 400	-	36						
			Alpha+Beta Alloys Cured	Rm 1050	-	37						
H	Hardened steel		Hardened	-	55 HRC	38	70-165	.004-.006	.005-.007	.006-.008	.006-.008	.006-.009
			Hardened	-	60 HRC	39						
	Chilled cast iron		Cast	-	400	40	.	.	.	.	.	.
	Cast iron nodular		Hardened	-	55 HRC	41						

Note: Feed and speed recommendations are starting operating parameters. They are only guidelines from which further optimization should take place. Operating parameters are influenced by many machining variables. These variables may cause for reductions in feeds and speed or dramatic increases.