NPA

EXPANSION

Member IMC Group Ingersoll Cutting Tools

New Product Announcement

TURNING

TABSORBER™

7xD, 10xD, 12xD, and 14xD Anti-Vibration Boring Bars Compatible With TModular Exchangeable Heads

- Internal boring, grooving, and threading with L/D ratios up to 14xD.
- Significantly reduce and, in some cases, completely eliminate vibration.
- Unique damping mechanism located inside the body of the bar.
- Serrated coupling design for robust tightening.
- Internal coolant supply improves chip control and evacuation.
- Multiple head designs for different shape positive and negative inserts.

Lengths

7xD
10xD
NEW **12xD**
NEW **14xD**

Diameters

Inch (stocked):
Ø .625, .750, 1.00, 1.25, 1.50, 2.00, 2.50"

Metric (stocked overseas):
Ø 16, 20, 25, 32, 40, 50, 60 mm

Head/Insert Styles

Positive:
- » CCMT 21.5/32.5/43
- » DCMT 21.5/32.5
- NEW » **TCMT 21.5/32.5**
- » VBMT 22/33

Negative:
- NEW » **CNMG 43**
- » CNMX 2.22
- » CNMX 43.5
- NEW » **DNMG 43**
- » DNMG 3.53.5
- » DNMX 2.22
- » VNMX 2.53
- » WNMX 2.22

Y-Axis Turning:
- » **TNMV**
- NEW » **ZNMV-BF**

ID Grooving:
- » **TTIR 2-6**

ID Threading:
- » 16IR/22IR

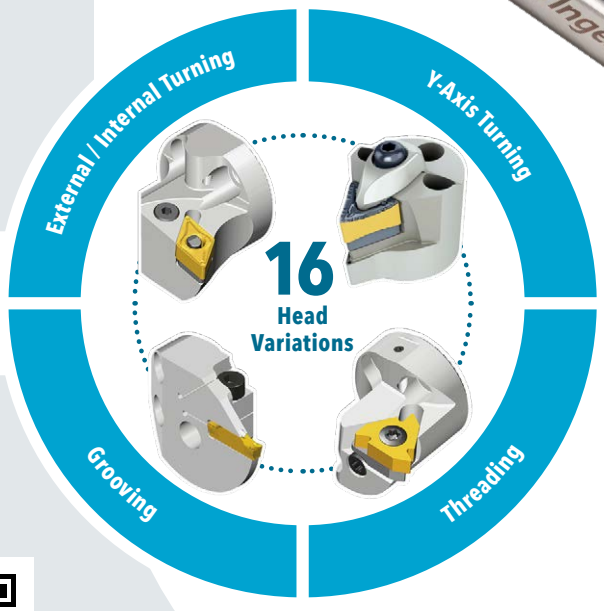

Compatible with TMODULAR™ exchangeable heads »

See it in action! »

SPEEDUP™ HIGH SPEED & FEED EXPANSION

ingersoll-imc.com

Overview

7xD, 10xD, 12xD, and 14xD Anti-Vibration Boring Bars Compatible With TModular Exchangeable Heads

Machining depths applied in internal turning (boring) applications differ according to the materials from which the boring bars are made; steel bars are used up to 3xD (bar diameter) and carbide boring bars up to 5xD. Deep boring, however, is very difficult to machine even with carbide bars. With the introduction of Ingersoll's **TAbsorber** boring bars and heads, it's now possible to bore and thread deep holes up to 14xD.

TAbsorber features an internal damping system that enables this deep boring capability. A serrated, rigid connection allows a variety of heads to be mounted to each bar, and in combination with the damping mechanism provides more stable machining that results in very good surface finish and longer tool life. The ability to absorb radial and axial tool force fluctuations means that increased feed rates and cutting speeds can be applied, thereby increasing productivity.

FEATURES & BENEFITS:

- Internal boring, grooving, and threading with L/D ratios up to 14xD.
- Significantly reduce and, in some cases, completely eliminate vibration.
- Unique damping mechanism located inside the body of the bar.
- For 12xD & 14xD bars, carbide rings are added for additional dampening.
- Serrated coupling design for robust tightening.
- Internal coolant supply improves chip control and evacuation.
- Multiple head designs for different shape positive and negative inserts.

In order to cover the complete range of applications for internal turning, Ingersoll provides a comprehensive series of high-quality internal boring bars for different insert geometries, covering all machining applications from 4xD to 14xD.

Three types of boring bars are available:

- solid steel
- solid carbide
- anti-vibration

Generally speaking, the recommended overhang for solid steel boring bars should not exceed 3xD. Under very stable conditions the maximum overhang can approach 4xD. This limitation is due the elasticity and characteristics of the steel material which can induce unwelcome vibrations.

To limit the vibration on overhangs between 4xD and 6xD, the use of solid carbide boring bars is recommended, as they represent an excellent, highly efficient option for boring applications of up to six times the tool's machining depth. This capability is attributed to solid carbide possessing a coefficient of elasticity that is three times higher than that of steel. However, when machining with overhangs beyond 6xD even the use of a solid carbide boring bar can cause deflection and vibrations.

BORING BAR MACHINING RANGE (BASED ON MAXIMUM DEPTH OF CUT)

Steel Shank

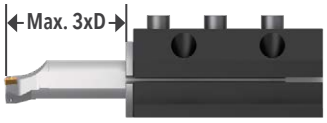

Carbide Shank

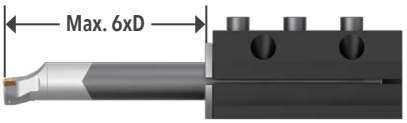

TABSORBER™

Anti-vibration

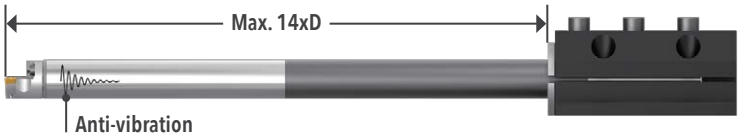

TABSORBER™ SHANK MATERIAL

7xD, 10xD
Inch: Ø .625–2.50"
Metric: Ø 16–60 mm

10xD • Carbide Shank
Inch: Ø .625, .750"
Metric: Ø 16, 20 mm

NEW **12xD, 14xD • Carbide Shank**
Inch: Ø 1.00–2.50"
Metric: Ø 25, 60 mm

Features

SHANK

- Internal vibration damping system
  - » Good surface finish and tool life
  - » Larger depth of cut and feed provides higher productivity
- Serrated coupling design for robust tightening
- Corrosion resistant stainless steel shanks
- Available as standard items in 4 different lengths: 7xD, 10xD, 12xD, 14xD
- Shanks available as standard items in 7 (inch) diameters: .625, .750, 1.00, 1.25, 1.50, 2.00, 2.50"
- 7 metric shanks also available: 16, 20, 25, 32, 40, 50, 60 mm

▶ Standard Shank Designation System

DTA-D□□□-□□D-□

1 2 3 4

1. TAbsorber shank
2. Shank diameters:
   - Inch - Ø .625, .75, 1.00, 1.25, 1.50, 2.00, 2.50"
3. Shank lengths: 7xD, 10xD, 12xD, 14xD
4. Shank material and coolant hole:
   A: steel; internal supply type
   C: steel; internal supply type, absorber
   E: carbide; internal supply type, absorber

Example: DTA-D1.00-10D-C

EXCHANGEABLE HEAD

- A variety of head types with various specifications
- Available inserts:
  - » ISO positive inserts: CCMT, DCMT, VBMT, TCMT
  - » ISO negative inserts: CNMG 43, DNMG 43
  - » RhinoTurn negative inserts: DNMG 3.5, VNMX 2.5
  - » RhinoTurnM negative inserts: CNMX 2.2, DNMX 2.2, WNMX 2.2
  - » GoldDuty negative inserts: CNMX43.5
  - » Grooving inserts: TTIR 2–6
  - » Lay down threading inserts: 16IR, 22IR
- Coolant-thru system direct to the cutting edge for improved chip control and longer tool life

▶ Standard Head Designation System

DTC-D□□□-□□□-□□□

1 2 3 4

1. TAbsorber head
2. Shank-to-head connection sizes:
   - Metric - Ø 16, 20, 25, 32, 40 mm
3. Head type (same as standard boring bars)
4. Insert size (ISO)

Example: DTC-D20-SCLCR-09

Features

Deep turning solutions for machining high depth to diameter internal applications include special anti-vibration boring bar systems with a 'live' vibration dampening system located inside the tool body.

Ingersoll's innovative TAbsorber anti-vibration boring bars have been designed to significantly reduce and even totally eliminate vibrations when working with a high overhang from 7xD to 14xD. Situated inside these tools is a unique damping mechanism that consists of a heavy mass that is supported by a rubber spring element containing oil to increase the required dampening effect.

In addition, the system contains other elements which help to further reduce vibrations. The reactive damping mechanism comes into action during machining with high overhang work depths and acts as an effective counter to vibrations. The highly effective, anti-vibration damper effect is applicable for large D.O.C and high feed rates, and ensures continuous, efficient machining. The new anti-vibration tools dramatically improve machining stability and prolong insert life. These factors enable meaningful increases in productivity to be achieved, improvements in surface quality on high overhangs to be attained, scrap levels to be reduced and users' profitability to be enhanced.

TAbsorber anti-vibration tools enable the delivery of internal coolant to be supplied directly to where it is required – the insert's cutting edge. The efficient distribution of coolant increases the insert's tool life by reducing temperature and also improves chip control and chip evacuation.

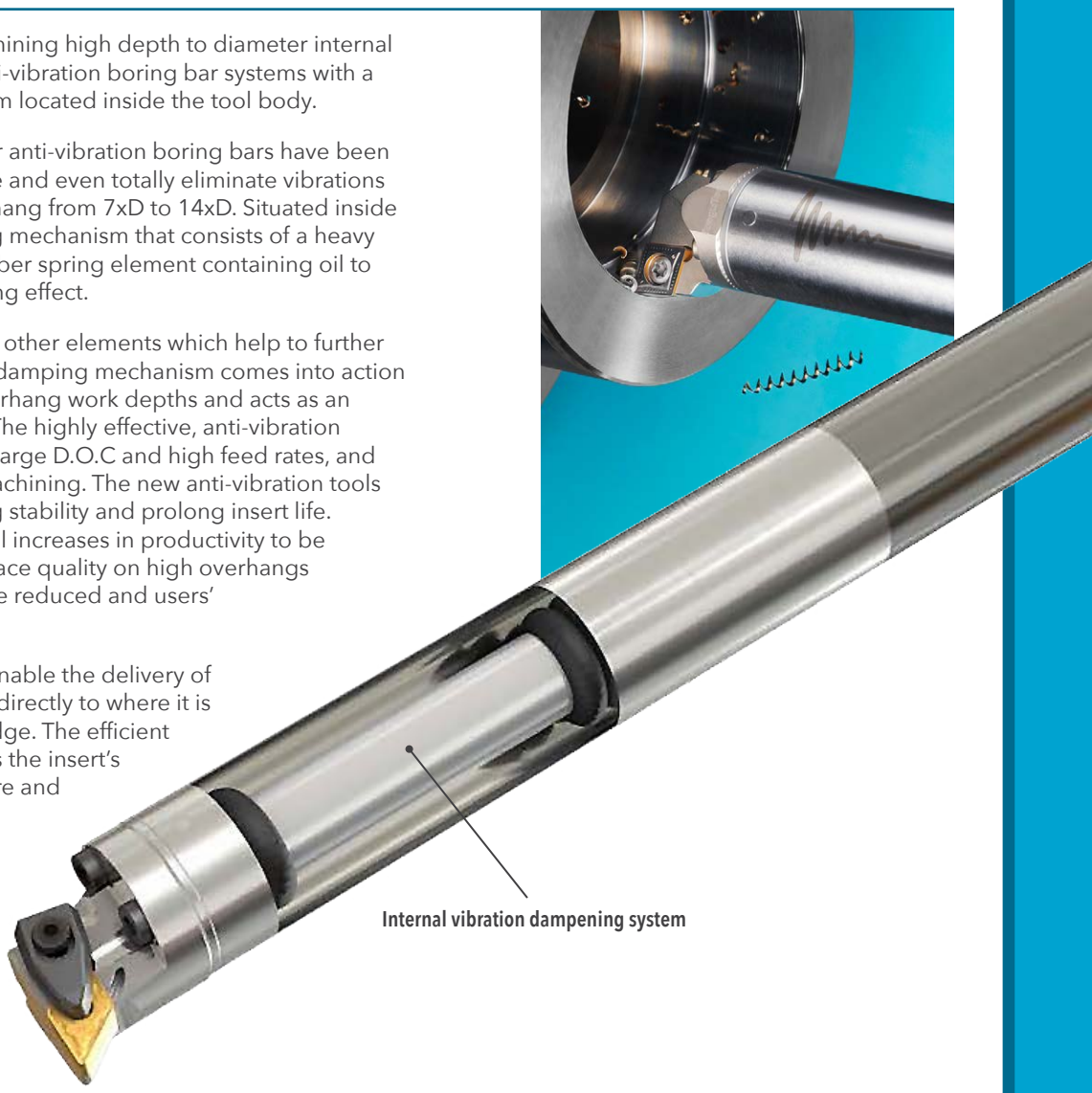

Insert Selection

SELECT INSERTS THAT GENERATE LOW CUTTING FORCES

- **Insert Style:** In general, positive (single-side) screw-held inserts generate lower tool pressure than negative (double-side) inserts, and the more positive the rake face angle the lower the tool pressure.

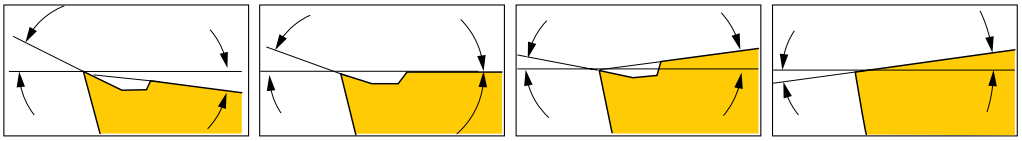

More Favorable ⟷ Less Favorable

- **Insert Shape:** D-type provides more advantages than C-type due to larger clearance and reduced contact area of the cutting edge.

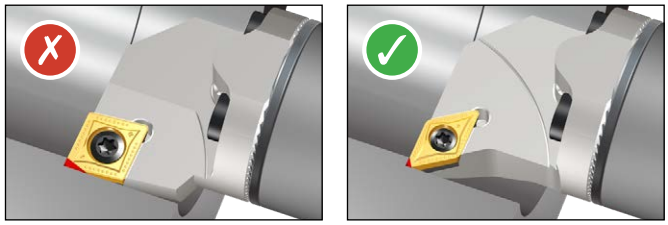

- **Lead Angle:** Stay as close to a 90-degree entering angle as possible.

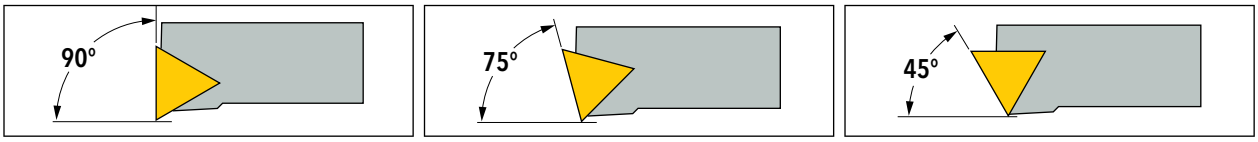

More Favorable ⟷ Less Favorable

- **Corner Radii:** Inserts with smaller corner radii will reduce tool pressure. It's ideal for the depth of cut to exceed the corner radius.

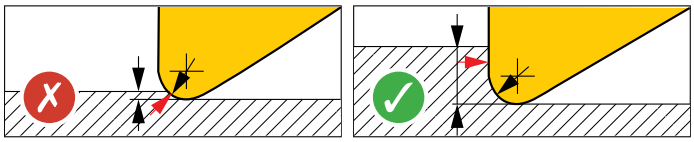

- **Chip Breakers:** Long chips can cause vibrations, so it is recommended to use an insert capable of breaking chips at the desired feed rate and depth-of-cut.

- **Wiper Geometry:** Not recommended due to more radial engagement that can cause more tool pressure and vibration.

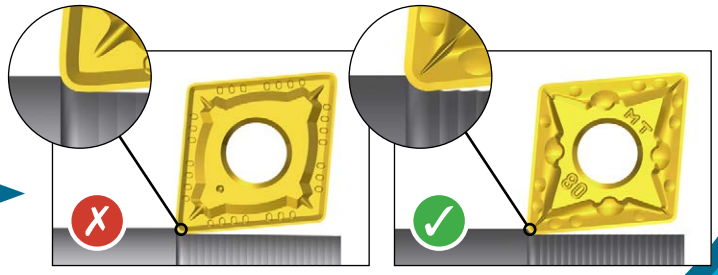

Wiper Insert | ISO Insert

Boring Bar Selection

SHANK LENGTH

The internal damping mechanism is located toward the head of the bar.

If necessary, it is possible to modify (cut-off) the bar up to the red line marked on each shank.
Note: bar shortening only applies to 7xD and 10xD bars. **12xD and 14xD bars cannot be shortened.**

BAR DIAMETER

It's important that the minimum bore diameter (Dmin) be 10–20% smaller than the machined bore in order to provide adequate chip evacuation, particularly in gummy materials where it is difficult to break a chip.

Bar Diameter	Minimum length after shortening	
DCONMS	7xD	10xD
INCH		
0.625	4.6	Not Recommended
0.750	5.6	Not Recommended
1.000	6.7	10.3
1.250	9.0	12.5
1.500	11.4	15.1
2.000	12.4	21.0
2.500	16.8	26.8
METRIC		
16	100	Not Recommended
20	125	Not Recommended
25	155	255
32	190	320
40	240	410
50	305	520
60	380	630

BAR POSITIONING

Work with the bar upside-down (see reference image below). This creates forces in the opposite direction to the bars weight, thus reducing the moment exerted on the tool post.

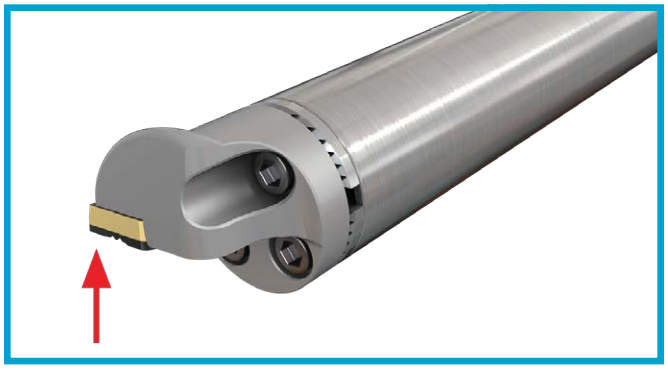

MOMENT CREATED FROM BAR WEIGHT

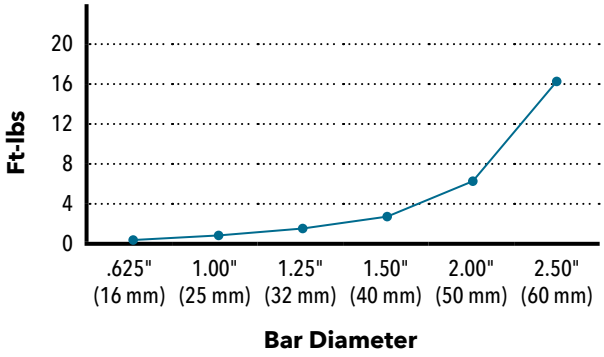

Setting Instructions

Set the shank to the holder so that the head's upper surface is horizontal to the gauge.

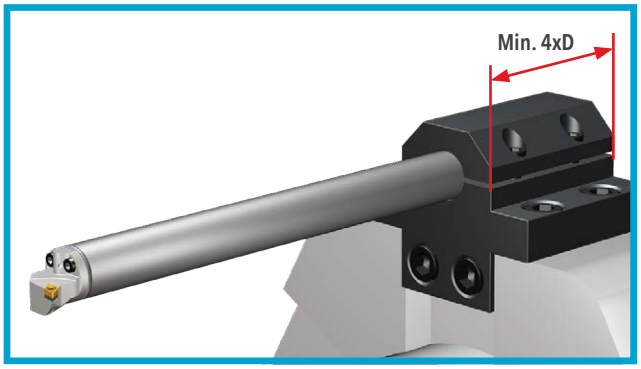

It's strongly recommended that the length of the mounted shank be at least 4xD.

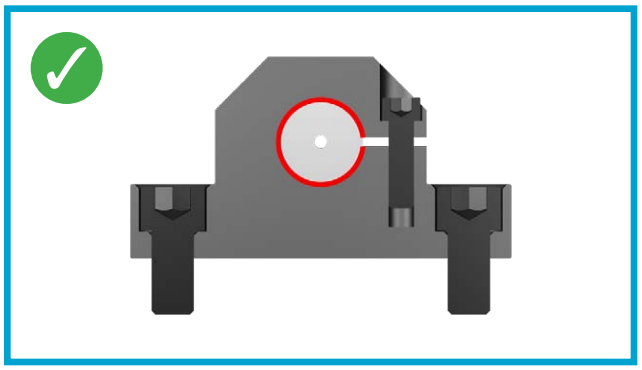

Ingersoll recommends the use of split type holders that have full cylindrical contact with the shank.

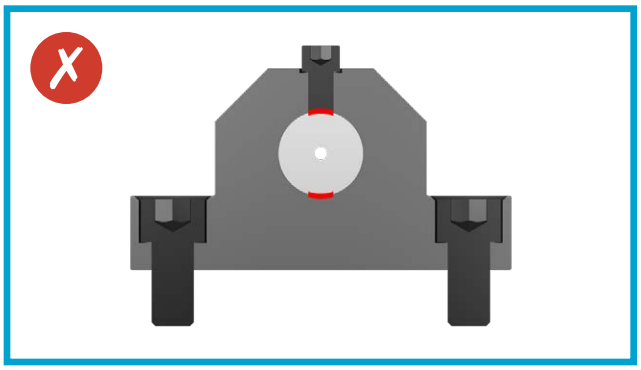

It is not recommended to use side lock clamping during operation; this will push the screw directly against the shank.

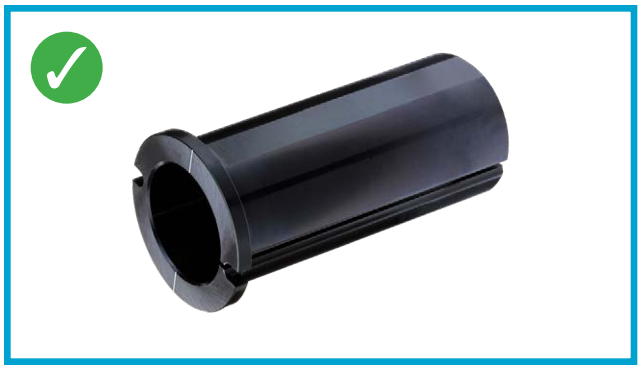

Ingersoll recommends the use of QSL split type sleeves. See **page 17** for complete list.

It is not recommended to use sleeves that allow clamping screw to tighten directly on TAbsorber bar.

Cutting Parameter Testing Table

Bars are tested to be chatter-free under the following conditions:

Description	Diameter Ø	Clamping	Ratio	ap Depth of Cut Max.	fz Inches/Rev (IPR)	Vc Cuting Speed SFM	Insert	Parameter testing (left table) was performed with the following:
DTA-D.625-7D-C	0.625"	4xD	7xD	0.047"	.004-.006"	130-330	CCMT 21.51	Machine: Flat bed lathes Material: Structural alloy steel - HRC 25 Coolant: Yes Pressure: 435 psi
DTA-D.625-10D-E			10xD	0.040"	.004-.005"	130-295		
DTA-D.750-7D-C	0.750"		7xD	0.060"	.004-.006"	165-360	CCMT 32.51	
DTA-D.750-10D-E			10xD	0.047"	.004-.005"	130-330		
DTA-D1.00-7D-C	1.000"		7xD	0.070"	.004-.008"	195-395		
DTA-D1.00-10D-C			10xD	0.055"	.004-.006"	165-360		
DTA-D1.00-12D-E			12xD	0.040"	.004-.006"	160-330		
DTA-D1.00-14D-E			14xD	0.040"	.004-.006"	160-330		
DTA-D1.25-7D-C	1.250"		7xD	0.087"	.004-.010"	230-425		
DTA-D1.25-10D-C			10xD	0.070"	.004-.008"	195-395		
DTA-D1.25-12D-E			12xD	0.040"	.004-.006"	160-330		
DTA-D1.25-14D-E			14xD	0.040"	.004-.006"	160-330	CCMT 432	
DTA-D1.50-7D-C	1.500"		7xD	0.098"	.004-.010"	260-490		
DTA-D1.50-10D-C			10xD	0.080"	.004-.008"	230-460		
DTA-D1.50-12D-E			12xD	0.040"	.004-.006"	160-330		
DTA-D1.50-14D-E			14xD	0.040"	.004-.006"	160-330		
DTA-D2.00-7D-C	2.000"		7xD	0.098"	.004-.010"	295-525		
DTA-D2.00-10D-C			10xD	0.080"	.004-.010"	260-490		
DTA-D2.00-12D-E			12xD	0.040"	.004-.006"	160-330		
DTA-D2.00-14D-E			14xD	0.040"	.004-.006"	160-330		
DTA-D2.50-7D-C	2.500"		7xD	0.118"	.004-.012"	330-590		
DTA-D2.50-10D-C			10xD	0.098"	.004-.010"	295-525		
DTA-D2.50-12D-E			12xD	0.040"	.004-.006"	160-330		
DTA-D2.50-14D-E			14xD	0.040"	.004-.006"	160-330		

Coolant

7xD • Series DTA-D__

MODULAR BARS

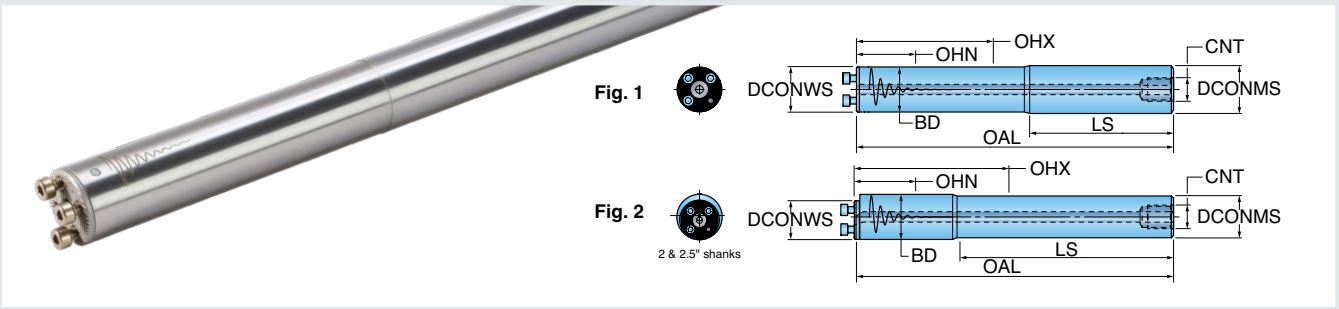

Part Number	DCONMS Connection Dia. Machine Side	DCONWS [1] Connection Dia. Workpiece Side	BD Body Dia.	OAL [2] Overall Length	LS Shank Length	OHN Min. Overhang	OHX Max. Overhang	CNT Coolant Entry Thread Size	BMC [3] Body Material Code	Fig.
INCH										
DTA-D.625-7D-C	.625	16 mm	0.630	6.14	3.60	2.60	3.50	G1/8	S	1
DTA-D.750-7D-C	.750	20 mm	0.787	7.87	4.94	2.93	4.40	G/4	S	1
DTA-D1.00-7D-C	1.000	25 mm	0.984	10.20	6.83	3.37	6.20	G1/4	S	1
DTA-D1.25-7D-C	1.250	32 mm	1.260	12.48	7.37	5.15	7.50	G3/8	S	1
DTA-D1.50-7D-C	1.500	40 mm	1.575	15.26	9.13	6.20	9.20	G1/2	S	1
DTA-D2.00-7D-C	2.000	40 mm	2.000	20.74	-	6.74	12.70	G1/2	S	2
DTA-D2.50-7D-C	2.500	40 mm	2.500	26.20	-	8.74	16.20	G3/4	S	2

1. DCON dimension of bar must match DCONMS dimension of head
2. See page 6 for details on cutting bars to shorter lengths
3. S = steel body, H = carbide body

Compatible with TMODULAR™ exchangeable heads »

Hardware

Part Number	Screw	Wrench	Split Type Sleeves • See page 17 for detailed dimensions			
			1.25" OD	1.50" OD	2.00" OD	2.50" OD
DTA-D.625-7D-C	SHM3X0.5X10	L-W2.5	QSL31.8-15.9-L66	QSL38.1-15.9-L106	-	-
DTA-D.750-7D-C	SRM3.5XL10-D5.5	L-W2.5	QSL31.8-19-L66	QSL38.1-19-L106	QSL50.8-19-L126	-
DTA-D1.00-7D-C	SHM4X0.7X12	L-W3	QSL31.8-25.4-L66	QSL38.1-25.4-L106	QSL50.8-25.4-L126	-
DTA-D1.25-7D-C	SHM5X0.8X12	L-W4	-	QSL38.1-31.8-L106	QSL50.8-31.8-L126	QSL63.5-31.8-L156
DTA-D1.50-7D-C	SHM6X1X16	L-W5	-	-	QSL50.8-38.1-L126	QSL63.5-38.1-L156
DTA-D2.00-7D-C	SHM6X1X16	L-W5	-	-	-	QSL63.5-50.8-L156
DTA-D2.50-7D-C	SHM6X1X16	L-W5	-	-	-	-

Coolant

7xD • Series DTA-D__

MODULAR BARS

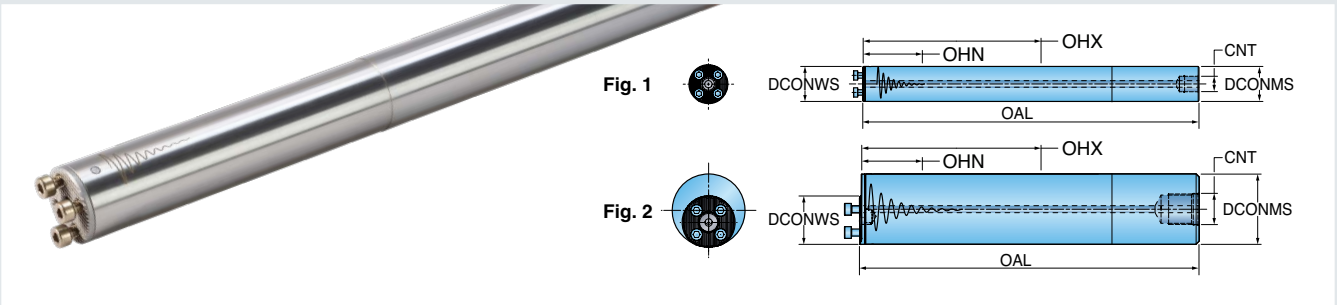

Part Number	DCONMS Connection Dia. Machine Side	DCONWS [1] Connection Dia. Workpiece Side	OAL [2] Overall Length	OHN Min. Overhang	OHX Max. Overhang	CNT Coolant Entry Thread Size	BMC [3] Body Material Code	Fig.
METRIC								
DTA-D16-7D-C	16	16	156	55	92	G1/8	S	1
DTA-D20-7D-C	20	20	200	70	120	G/4	S	1
DTA-D25-7D-C	25	25	258	88	155	G1/4	S	1
DTA-D32-7D-C	32	32	323	120	192	G3/8	S	1
DTA-D40-7D-C	40	40	411	128	251	G1/2	S	1
DTA-D50-7D-C	50	40	523	168	318	G1/2	S	2
DTA-D60-7D-C	60	40	633	208	388	G3/4	S	2

1. DCON dimension of bar must match DCONMS dimension of head
2. See page 6 for details on cutting bars to shorter lengths
3. S = steel body, H = carbide body

Compatible with TMODULAR™ exchangeable heads »

Hardware

Part Number	Screw	Wrench	Split Type Sleeves • See page 17 for detailed dimensions			
			32 mm OD	40 mm OD	50 mm OD	60 mm OD
DTA-D16-7D-C	SHM3X0.5X10	L-W2.5	QSL32-16-L66	QSL40-16-L106	-	-
DTA-D20-7D-C	SRM3.5XL10-D5.5	L-W2.5	QSL32-20-L66	QSL40-20-L106	QSL50-20-L126	-
DTA-D25-7D-C	SHM4X0.7X12	L-W3	QSL32-25-L66	QSL40-25-L106	QSL50-25-L126	-
DTA-D32-7D-C	SHM5X0.8X12	L-W4	-	QSL40-32-L106	QSL50-32-L126	QSL60-32-L156
DTA-D40-7D-C	SHM6X1X16	L-W5	-	-	QSL50-40-L126	QSL60-40-L156
DTA-D50-7D-C	SHM6X1X16	L-W5	-	-	-	QSL60-50-L156
DTA-D60-7D-C	SHM6X1X16	L-W5	-	-	-	-

Coolant

10xD • Series DTA-D__

MODULAR BARS

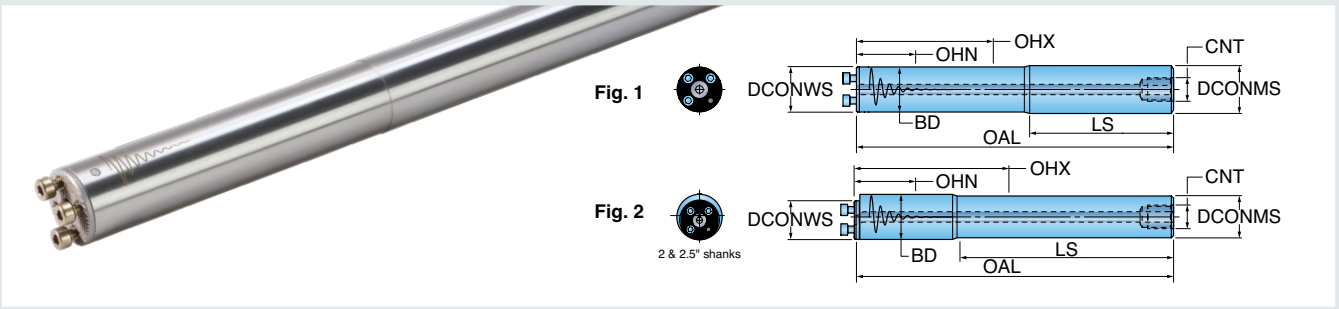

Part Number	DCONMS Connection Dia. Machine Side	DCONWS [1] Connection Dia. Workpiece Side	BD Body Dia.	OAL [2] Overall Length	LS Shank Length	OHN Min. Overhang	OHX Max. Overhang	CNT Coolant Entry Thread Size	BMC [3] Body Material Code	Fig.
INCH										
DTA-D.625-10D-E	.625	16 mm	0.630	8.03	5.22	3.59	5.50	-	H	1
DTA-D.750-10D-E	.750	20 mm	0.787	10.24	6.77	4.46	7.00	-	H	1
DTA-D1.00-10D-C	1.000	25 mm	0.984	13.21	8.65	6.21	9.20	G1/4	S	1
DTA-D1.25-10D-C	1.250	32 mm	1.260	16.24	9.67	7.49	11.20	G3/8	S	1
DTA-D1.50-10D-C	1.500	40 mm	1.575	19.80	13.35	9.24	13.70	G1/2	S	1
DTA-D2.00-10D-C	2.000	40 mm	2.000	26.73	-	12.74	18.70	G1/2	S	2
DTA-D2.50-10D-C	2.500	40 mm	2.500	33.72	-	16.24	23.70	G3/4	S	2

1. DCON dimension of bar must match DCONMS dimension of head
2. See page 6 for details on cutting bars to shorter lengths
3. S = steel body, H = carbide body

Compatible with TMODULAR™ exchangeable heads »

Hardware

Part Number	Screw	Wrench	Split Type Sleeves • See page 17 for detailed dimensions			
			1.25" OD	1.50" OD	2.00" OD	2.50" OD
DTA-D.625-10D-E	SHM3X0.5X10	L-W2.5	QSL31.8-15.9-L66	QSL38.1-15.9-L106	-	-
DTA-D.750-10D-E	SRM3.5XL10-D5.5	L-W2.5	QSL31.8-19-L66	QSL38.1-19-L106	QSL50.8-19-L126	-
DTA-D1.00-10D-C	SHM4X0.7X12	L-W3	QSL31.8-25.4-L66	QSL38.1-25.4-L106	QSL50.8-25.4-L126	-
DTA-D1.25-10D-C	SHM5X0.8X12	L-W4	-	QSL38.1-31.8-L106	QSL50.8-31.8-L126	QSL63.5-31.8-L156
DTA-D1.50-10D-C	SHM6X1X16	L-W5	-	-	QSL50.8-38.1-L126	QSL63.5-38.1-L156
DTA-D2.00-10D-C	SHM6X1X16	L-W5	-	-	-	QSL63.5-50.8-L156
DTA-D2.50-10D-C	SHM6X1X16	L-W5	-	-	-	-

Coolant

10xD • Series DTA-D__

MODULAR BARS

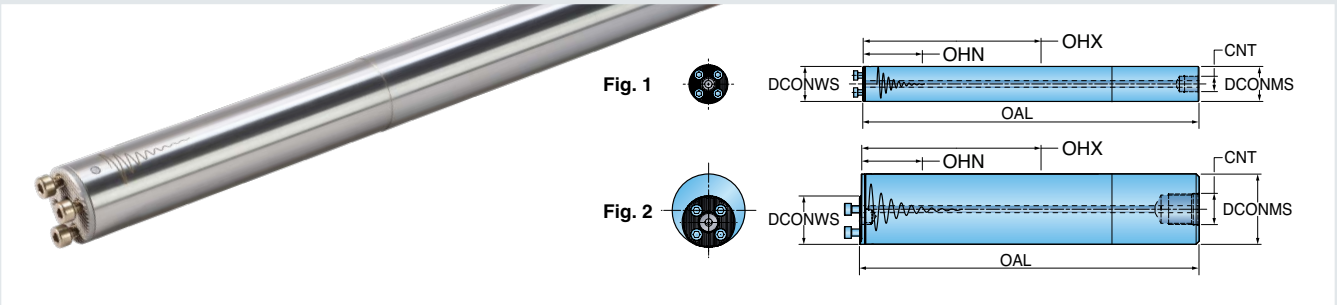

Part Number	DCONMS Connection Dia. Machine Side	DCONWS [1] Connection Dia. Workpiece Side	OAL [2] Overall Length	OHN Min. Overhang	OHX Max. Overhang	CNT Coolant Entry Thread Size	BMC [3] Body Material Code	Fig.
METRIC								
DTA-D16-10D-C	16	16	204	96	140	-	H	1
DTA-D20-10D-C	20	20	260	120	180	-	H	1
DTA-D25-10D-C	25	25	333	155	230	G1/4	S	1
DTA-D32-10D-C	32	32	419	192	288	G3/8	S	1
DTA-D40-10D-C	40	40	531	248	368	G1/2	S	1
DTA-D50-10D-C	50	40	673	318	468	G1/2	S	2
DTA-D60-10D-C	60	40	813	388	568	G3/4	S	2

1. DCON dimension of bar must match DCONMS dimension of head
2. See page 6 for details on cutting bars to shorter lengths
3. S = steel body, H = carbide body

Compatible with TMODULAR™ exchangeable heads »

Hardware

Part Number	Screw	Wrench	Split Type Sleeves • See page 17 for detailed dimensions			
			32 mm OD	40 mm OD	50 mm OD	60 mm OD
DTA-D16-10D-C	SHM3X0.5X10	L-W2.5	QSL32-16-L66	QSL40-16-L106	-	-
DTA-D20-10D-C	SRM3.5XL10-D5.5	L-W2.5	QSL32-20-L66	QSL40-20-L106	QSL50-20-L126	-
DTA-D25-10D-C	SHM4X0.7X12	L-W3	QSL32-25-L66	QSL40-25-L106	QSL50-25-L126	-
DTA-D32-10D-C	SHM5X0.8X12	L-W4	-	QSL40-32-L106	QSL50-32-L126	QSL60-32-L156
DTA-D40-10D-C	SHM6X1X16	L-W5	-	-	QSL50-40-L126	QSL60-40-L156
DTA-D50-10D-C	SHM6X1X16	L-W5	-	-	-	QSL60-50-L156
DTA-D60-10D-C	SHM6X1X16	L-W5	-	-	-	-

Coolant

12xD • Series DTA-D__ NEW

MODULAR BARS

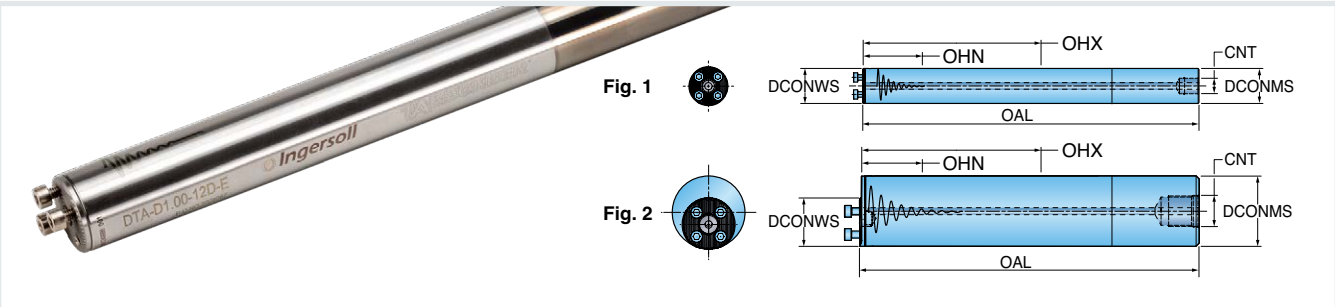

Part Number	DCONMS Connection Dia. Machine Side	DCONWS [1] Connection Dia. Workpiece Side	OAL Overall Length	OHN Min. Overhang	OHX Max. Overhang	CNT Coolant Entry Thread Size	BMC [2] Body Material Code	Fig.
INCH								
DTA-D1.00-12D-E	1.000	25 mm	15.20	9.06	11.18	G1/8	H	1
DTA-D1.25-12D-E	1.250	32 mm	18.90	11.34	13.74	G1/4	H	1
DTA-D1.50-12D-E	1.500	40 mm	22.80	14.49	16.73	G3/8	H	1
DTA-D2.00-12D-E	2.000	40 mm	30.80	18.43	22.76	G1/2	H	2
DTA-D2.50-12D-E	2.500	40 mm	38.70	23.15	28.74	G3/4	H	2

1. DCON dimension of bar must match DCONMS dimension of head
2. S = steel body, H = carbide body

Compatible with TMODULAR™ exchangeable heads »

Hardware

Part Number	Screw	Wrench	Split Type Sleeves • See page 17 for detailed dimensions			
			1.25" OD	1.50" OD	2.00" OD	2.50" OD
DTA-D1.00-12D-E	SHM4X0.7X12	L-W3	QSL31.8-25.4-L66	QSL38.1-25.4-L106	QSL50.8-25.4-L126	-
DTA-D1.25-12D-E	SHM5X0.8X12	L-W4	-	QSL38.1-31.8-L106	QSL50.8-31.8-L126	QSL63.5-31.8-L156
DTA-D1.50-12D-E	SHM6X1X16	L-W5	-	-	QSL50.8-38.1-L126	QSL63.5-38.1-L156
DTA-D2.00-12D-E	SHM6X1X16	L-W5	-	-	-	QSL63.5-50.8-L156
DTA-D2.50-12D-E	SHM6X1X16	L-W5	-	-	-	-

Coolant

12xD • Series DTA-D__ NEW

MODULAR BARS

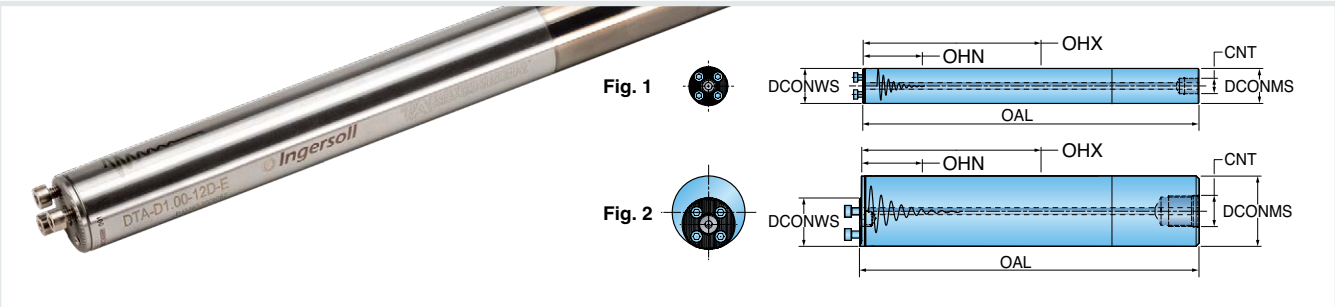

Part Number	DCONMS Connection Dia. Machine Side	DCONWS [1] Connection Dia. Workpiece Side	OAL Overall Length	OHN Min. Overhang	OHX Max. Overhang	CNT Coolant Entry Thread Size	BMC [2] Body Material Code	Fig.
METRIC								
DTA-D25-12D-E	25	25	380	230	280	G1/8	H	1
DTA-D32-12D-E	32	32	480	288	352	G1/4	H	1
DTA-D40-12D-E	40	40	608	368	448	G3/8	H	1
DTA-D50-12D-E	50	40	768	468	568	G1/2	H	2
DTA-D60-12D-E	60	40	920	588	688	G3/4	H	2

1. DCON dimension of bar must match DCONMS dimension of head
2. S = steel body, H = carbide body

Compatible with TMODULAR™ exchangeable heads »

Hardware

Part Number	Screw	Wrench	Split Type Sleeves • See page 17 for detailed dimensions			
			32 mm OD	40 mm OD	50 mm OD	60 mm OD
DTA-D25-12D-E	SHM4X0.7X12	L-W3	QSL32-25-L66	QSL40-25-L106	QSL50-25-L126	-
DTA-D32-12D-E	SHM5X0.8X12	L-W4	-	QSL40-32-L106	QSL50-32-L126	QSL60-32-L156
DTA-D40-12D-E	SHM6X1X16	L-W5	-	-	QSL50-40-L126	QSL60-40-L156
DTA-D50-12D-E	SHM6X1X16	L-W5	-	-	-	QSL60-50-L156
DTA-D60-12D-E	SHM6X1X16	L-W5	-	-	-	-

Coolant

14xD • Series DTA-D__ NEW

MODULAR BARS

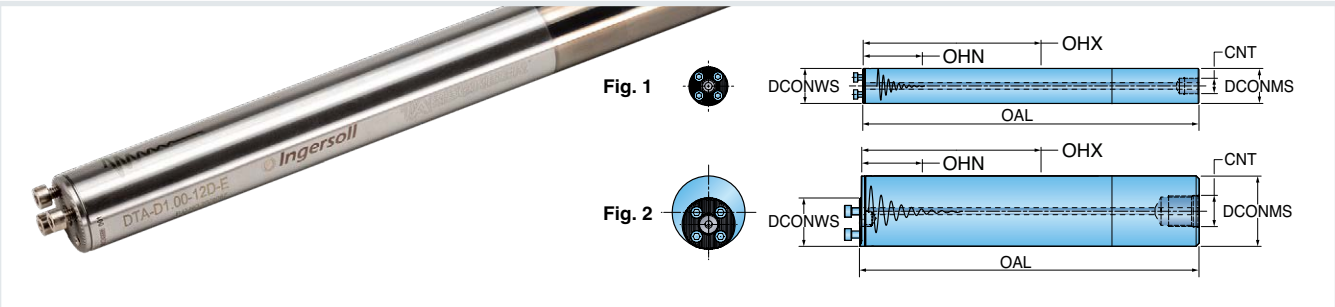

Part Number	DCONMS Connection Dia. Machine Side	DCONWS [1] Connection Dia. Workpiece Side	OAL Overall Length	OHN Min. Overhang	OHX Max. Overhang	CNT Coolant Entry Thread Size	BMC [2] Body Material Code	Fig.
INCH								
DTA-D1.00-14D-E	1.000	25 mm	17.20	11.02	13.19	G1/8	H	1
DTA-D1.25-14D-E	1.250	32 mm	21.40	13.86	16.26	G1/4	H	1
DTA-D1.50-14D-E	1.500	40 mm	25.80	17.64	19.72	G3/8	H	1
DTA-D2.00-14D-E	2.000	40 mm	34.70	22.36	25.55	G1/2	H	2
DTA-D2.50-14D-E	2.500	40 mm	43.70	27.09	33.74	G3/4	H	2

1. DCON dimension of bar must match DCONMS dimension of head
2. S = steel body, H = carbide body

Compatible with TMODULAR™ exchangeable heads »

Hardware

Part Number	Screw	Wrench	Split Type Sleeves • See page 17 for detailed dimensions			
			1.25" OD	1.50" OD	2.00" OD	2.50" OD
DTA-D1.00-14D-E	SHM4X0.7X12	L-W3	QSL31.8-25.4-L66	QSL38.1-25.4-L106	QSL50.8-25.4-L126	-
DTA-D1.25-14D-E	SHM5X0.8X12	L-W4	-	QSL38.1-31.8-L106	QSL50.8-31.8-L126	QSL63.5-31.8-L156
DTA-D1.50-14D-E	SHM6X1X16	L-W5	-	-	QSL50.8-38.1-L126	QSL63.5-38.1-L156
DTA-D2.00-14D-E	SHM6X1X16	L-W5	-	-	-	QSL63.5-50.8-L156
DTA-D2.50-14D-E	SHM6X1X16	L-W5	-	-	-	-

Coolant

14xD • Series DTA-D__ NEW

MODULAR BARS

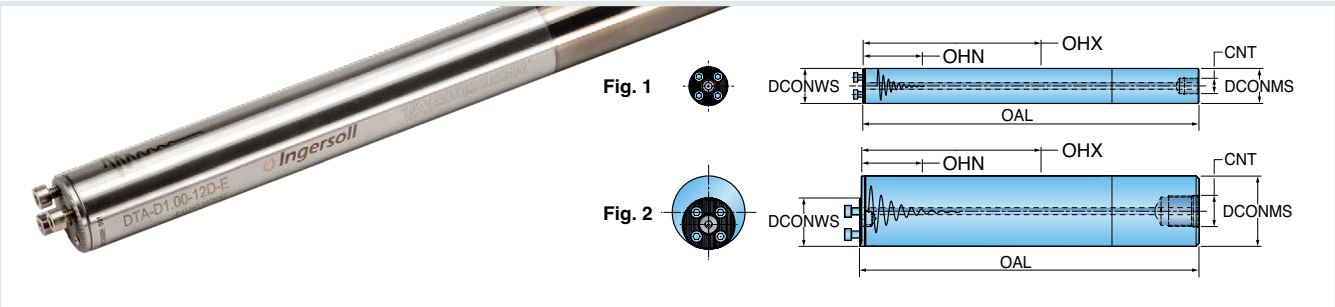

Part Number	DCONMS Connection Dia. Machine Side	DCONWS [1] Connection Dia. Workpiece Side	OAL Overall Length	OHN Min. Overhang	OHX Max. Overhang	CNT Coolant Entry Thread Size	BMC [2] Body Material Code	Fig.
METRIC								
DTA-D25-14D-E	25	25	430	280	330	G1/8	H	1
DTA-D32-14D-E	32	32	544	352	416	G1/4	H	1
DTA-D40-14D-E	40	40	688	448	528	G3/8	H	1
DTA-D50-14D-E	50	40	868	568	668	G1/2	H	2
DTA-D60-14D-E	60	40	1040	688	808	G3/4	H	2

1. DCON dimension of bar must match DCONMS dimension of head
2. S = steel body, H = carbide body

Compatible with TMODULAR™ exchangeable heads »

Hardware

Part Number	Screw	Wrench	Split Type Sleeves • See page 17 for detailed dimensions			
			32 mm OD	40 mm OD	50 mm OD	60 mm OD
DTA-D25-14D-E	SHM4X0.7X12	L-W3	QSL32-25-L66	QSL40-25-L106	QSL50-25-L126	-
DTA-D32-14D-E	SHM5X0.8X12	L-W4	-	QSL40-32-L106	QSL50-32-L126	QSL60-32-L156
DTA-D40-14D-E	SHM6X1X16	L-W5	-	-	QSL50-40-L126	QSL60-40-L156
DTA-D50-14D-E	SHM6X1X16	L-W5	-	-	-	QSL60-50-L156
DTA-D60-14D-E	SHM6X1X16	L-W5	-	-	-	-

Series QSL

SPLIT TYPE SLEEVES*

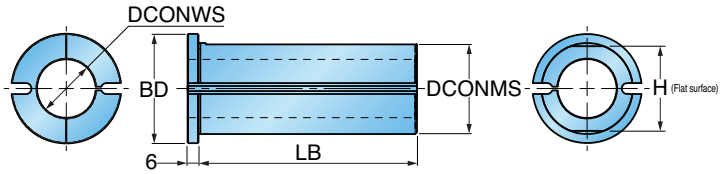

Part Number	DCONMS Connection Diameter Machine Side	DCONWS Connection Diameter Workpiece Side	BD Body Diameter	LB Body Length	H Height
INCH					
QSL31.8-15.9-L66	1.250	0.625	1.654	2.362	1.210
QSL31.8-19-L66	1.250	0.750	1.654	2.362	1.210
QSL31.8-25.4-L66	1.250	1.000	1.654	2.362	1.210
QSL38.1-15.9-L106	1.500	0.625	1.969	3.937	1.461
QSL38.1-19-L106	1.500	0.750	1.969	3.937	1.461
QSL38.1-25.4-L106	1.500	1.000	1.969	3.937	1.461
QSL38.1-31.8-L106	1.500	1.250	1.969	3.937	1.461
QSL50.8-19-L126	2.000	0.750	2.362	4.724	1.941
QSL50.8-25.4-L126	2.000	1.000	2.362	4.724	1.941
QSL50.8-31.8-L126	2.000	1.250	2.362	4.724	1.941
QSL50.8-38.1-L126	2.000	1.500	2.362	4.724	1.941
QSL63.5-31.8-L156	2.500	1.250	2.756	5.906	2.441
QSL63.5-38.1-L156	2.500	1.500	2.756	5.906	2.441
QSL63.5-50.8-L156	2.500	2.000	2.756	5.906	2.441
METRIC					
QSL32-16-L66	32	16	42	60	30.5
QSL32-20-L66	32	20	42	60	30.5
QSL32-25-L66	32	25	42	60	30.5
QSL40-16-L106	40	16	50	100	38.5
QSL40-20-L106	40	20	50	100	38.5
QSL40-25-L106	40	25	50	100	38.5
QSL40-32-L106	40	32	50	100	38.5
QSL50-20-L126	50	20	60	120	48.5
QSL50-25-L126	50	25	60	120	48.5
QSL50-32-L126	50	32	60	120	48.5
QSL50-40-L126	50	40	60	120	48.5
QSL60-32-L156	60	32	70	150	58.5
QSL60-40-L156	60	40	70	150	58.5
QSL60-50-L156	60	50	70	150	58.5

*ADDITIONAL HOLDERS
(available upon request)

VDI

Tool Blocks

Power Chucks