NPA

UPDATE

Member IMC Group
Ingersoll Cutting Tools

New Product Announcement

MILLING - INDEXABLE

DIPOSQUADF™

Cutter Series (Angle x Depth of Cut)

DN5G DN6G (45° x 0.165")
DG6G (20° x .070")
DN5K DN6K (45° x 0.235")
DG6K (20° x 0.100")

Insert Series

SQGU11 / SQMU11_ANN
SQGU14 / SQMU14_ANN

Diameter Range

1.50-8.00" (40-200 mm)

Lead Angles

45°
20° (hi-feed)

Materials

Steel
Iron

45° and Hi-Feed Face Mills that share the same High-Strength, 8-Edge Insert

- Extreme geometry enjoys heavy feed rates and promotes efficient chip evacuation.
- Offered with 2 insert IC sizes for depth-of-cut and density diversity.
- Integrated wiper flats produce 32-63 Ra finishes.

11 mm

14 mm

See it in action! »

WINSFEED™ ADVANCED MACHINING

ingersoll-imc.com

Features & Benefits

- Economical double-sided 8-corner insert
- Two lead angle cutters for roughing and high-feed machining

45° cutters: deep depth of cut for roughing

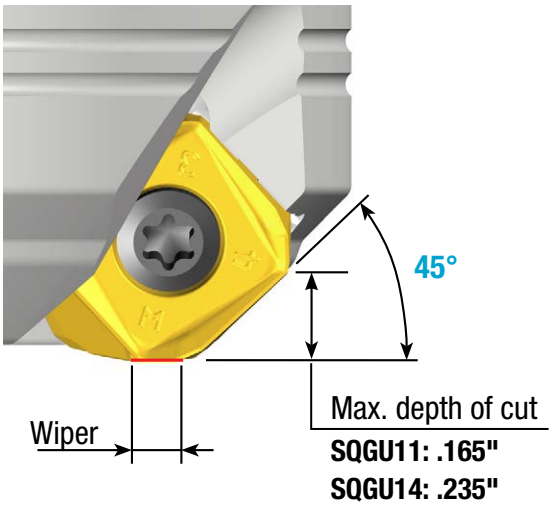

20° cutters: for high feed milling

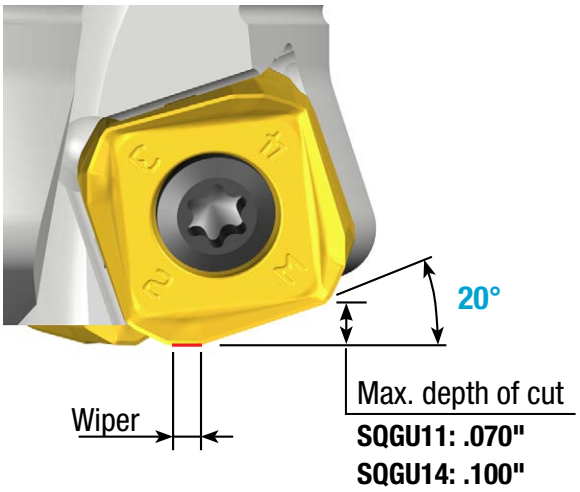

- Wiper edge for excellent surface roughness
  Note: good visual roughness requires feed rate adjustment

- Reinforced edge optimized for high feed machining

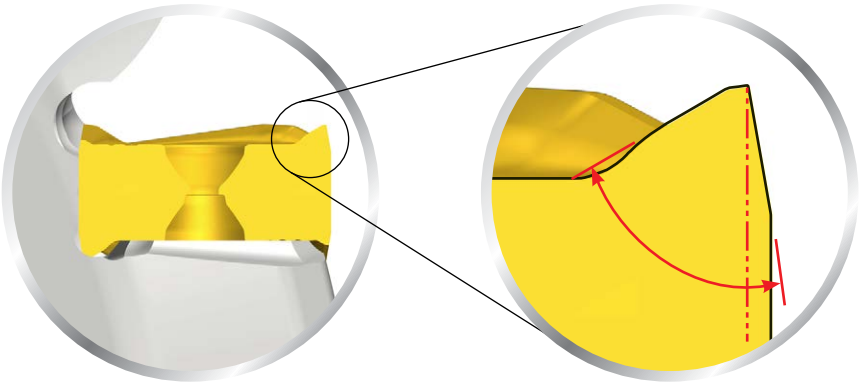

- High negative radial rake angle and high positive axial rake angle

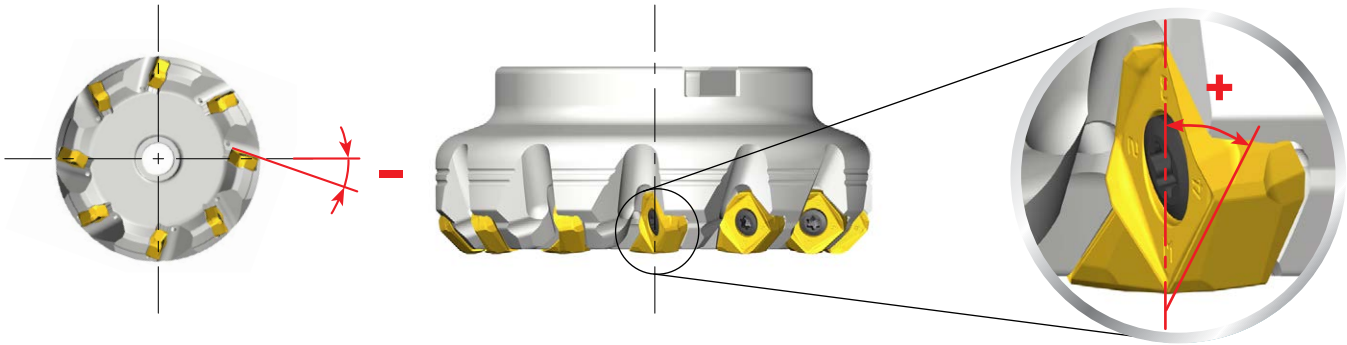

- Excellent chip evacuation due to reduced chip volume
- Enhanced body rigidity for excellent machining performance under harsh cutting conditions
- Fine pitch cutter maximizes productivity

Conventional

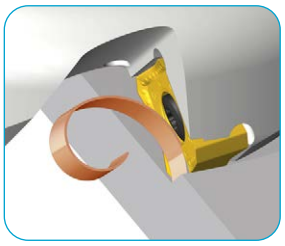

DiPosQuadF

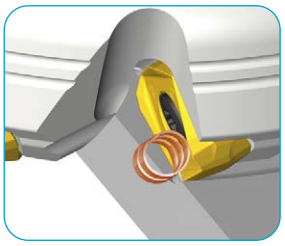

Conventional cutter	DiPosQuadF cutter	
	Normal pitch	Fine pitch
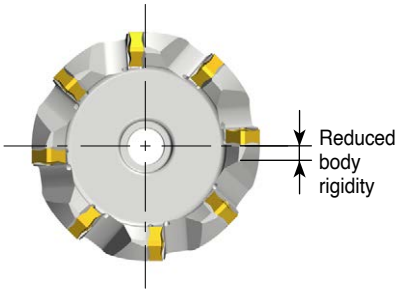	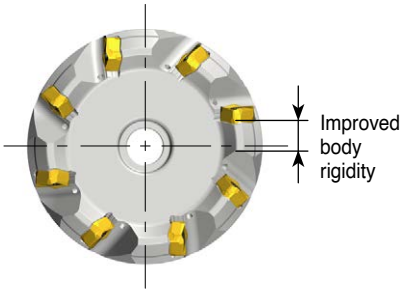	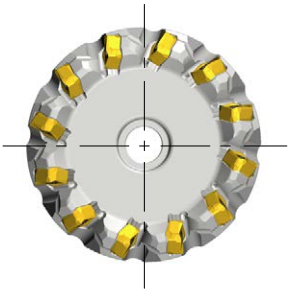
Reduced body rigidity due to the wider space for insert clamping and chip evacuation	Improved body rigidity and ideal chip evacuation in the narrowest space	Larger number of teeth for higher productivity

Face | Lead Angle | Channel

11 mm • Series DN5G, DN6G

45° FACE MILL

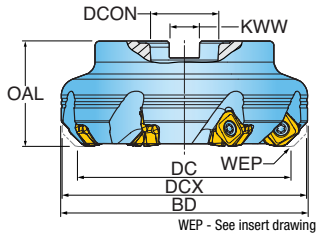

WEP - See insert drawing for wiper options.

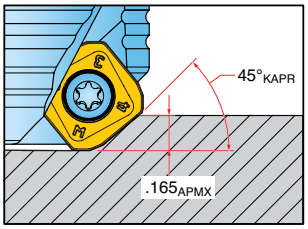

Part Number	DC Cutting Diameter	DCX Cutting Diameter Max.	OAL Overall Length	ZEFF Eff. Teeth	BD Body Diameter	DCON Bore Diameter	KWW Keyway	CSP Coolant
INCH								
DN6G-15R01	1.500	1.93	1.570	4	1.97	0.5000	0.250	Yes
DN5G-15R01	1.500	1.93	1.570	6	1.97	0.5000	0.250	Yes
DN6G-20R01	2.000	2.43	1.750	6	2.47	0.7500	0.312	Yes
DN5G-20R01	2.000	2.43	1.750	8	2.47	0.7500	0.312	Yes
DN6G-25R01	2.500	2.93	1.750	7	2.97	1.0000	0.375	Yes
DN5G-25R01	2.500	2.93	1.750	10	2.97	1.0000	0.375	Yes
DN6G-30R01	3.000	3.43	1.750	8	3.47	1.0000	0.375	Yes
DN5G-30R01	3.000	3.43	1.750	12	3.47	1.0000	0.375	Yes
DN6G-40R01	4.000	4.43	2.375	9	4.47	1.5000	0.625	Yes
DN5G-40R01	4.000	4.43	2.375	14	4.47	1.5000	0.625	Yes
DN6G-50R01	5.000	5.43	2.375	12	5.47	1.5000	0.625	Yes
DN5G-50R01	5.000	5.43	2.375	18	5.47	1.5000	0.625	Yes
DN6G-60R01	6.000	6.43	2.375	16	6.47	1.5000	0.625	No
DN5G-60R01	6.000	6.43	2.375	24	6.47	1.5000	0.625	No
METRIC								
DN5G040R00	40.00 mm	51.0 mm	40.00 mm	6	52.0 mm	16.000 mm	8.40 mm	Yes
DN6G040R00	40.00 mm	51.0 mm	40.00 mm	4	52.0 mm	16.000 mm	8.40 mm	Yes
DN5G050R00	50.00 mm	61.0 mm	40.00 mm	8	62.0 mm	22.000 mm	10.40 mm	Yes
DN6G050R00	50.00 mm	61.0 mm	40.00 mm	6	62.0 mm	22.000 mm	10.40 mm	Yes
DN5G063R00	63.00 mm	74.0 mm	50.00 mm	10	75.0 mm	22.000 mm	10.40 mm	Yes
DN6G063R00	63.00 mm	74.0 mm	50.00 mm	7	75.0 mm	22.000 mm	10.40 mm	Yes
DN5G080R00	80.00 mm	91.0 mm	50.00 mm	12	92.0 mm	27.000 mm	12.40 mm	Yes
DN6G080R00	80.00 mm	91.0 mm	50.00 mm	8	92.0 mm	27.000 mm	12.40 mm	Yes
DN5G100R00	100.00 mm	111.0 mm	50.00 mm	14	112.0 mm	32.000 mm	14.40 mm	Yes
DN6G100R00	100.00 mm	111.0 mm	50.00 mm	9	112.0 mm	32.000 mm	14.40 mm	Yes
DN5G125R00	125.00 mm	136.0 mm	63.00 mm	18	137.0 mm	40.000 mm	16.40 mm	Yes
DN6G125R00	125.00 mm	136.0 mm	63.00 mm	12	137.0 mm	40.000 mm	16.40 mm	Yes
DN5G160R00	160.00 mm	171.0 mm	63.00 mm	24	172.0 mm	40.000 mm	16.40 mm	No
DN6G160R00	160.00 mm	171.0 mm	63.00 mm	16	172.0 mm	40.000 mm	16.40 mm	No

Face | Lead Angle | Channel | Plunge | Coolant

11 mm • Series DG6G

20° FACE MILL • HI-FEED

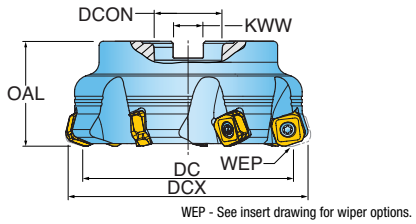

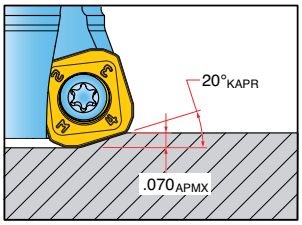

Part Number	DC Cutting Diameter	DCX Cutting Diameter Max.	OAL Overall Length	ZEFF Eff. Teeth	DCON Bore Diameter	KWW Keyway	CSP Coolant
INCH							
DG6G-20R01	2.000	2.53	1.570	4	0.7500	0.312	Yes
DG6G-25R01	2.500	3.03	1.750	5	1.0000	0.375	Yes
DG6G-30R01	3.000	3.53	1.750	6	1.0000	0.375	Yes
DG6G-40R01	4.000	4.53	2.375	8	1.5000	0.625	Yes
METRIC							
DG6G050R00	50.00 mm	63.50 mm	40.00 mm	4	22.00 mm	10.40 mm	Yes
DG6G063R00	63.00 mm	76.50 mm	50.00 mm	5	22.00 mm	10.40 mm	Yes
DG6G080R00	80.00 mm	93.50 mm	50.00 mm	6	27.00 mm	12.40 mm	Yes
DG6G100R00	100.00 mm	113.50 mm	50.00 mm	8	32.00 mm	14.40 mm	Yes

11 mm • Inserts

FOR SERIES DN5G, DN6G, AND DG6G

SQGU11_M

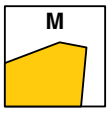

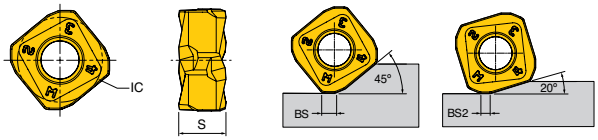

SQGU11_ML

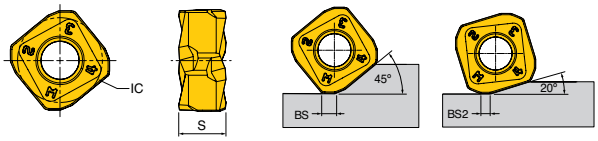

SQMU11_ANN

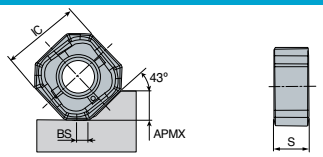

Part Number	Application	BS Wiper Length	BS2 Wiper Length	IC Inscribed Circle Dia.	S Thickness	NOI Number of Indexes	IH Insert Hand	Grade					
								IN2036	IN2505	IN2510	IN2530	IN6537	IN71N
SQGU1105ANR-M	Multi-Purpose	0.075	0.039	0.44	0.248	8	Right		•	•		•	
SQGU1105ANR-ML	SS / Hi-Temp / Ti	0.075	0.039	0.44	0.248	8	Right	•	•		•		
SQMU1105ANN*	SiN for Iron	0.057	-	0.44	0.197	8	Right						•

*Ceramic insert is only usable in the 45° Face mills

11 mm • Hardware

Part Number	Screw	Driver Handle	Torx Driver Blade	Retention Bolt	Optional: Coolant Retention Bolt	Optional: Torque Driver Handle	Optional: Preset Torque Adapter	Optional: Torque Driver Bit
INCH								
DN6G-15R01	SM40-115-00	DS-A00T	DS-T156B	SD-04-46	-	DS-A00-.25-T	DT-35-.25	DS-T15B1
DN5G-15R01	SM40-115-00	DS-A00T	DS-T156B	SD-04-46	-	DS-A00-.25-T	DT-35-.25	DS-T15B1
DN6G-20R01	SM40-115-00	DS-A00T	DS-T156B	SD-06-47	SD-06-A6	DS-A00-.25-T	DT-35-.25	DS-T15B1
DN5G-20R01	SM40-115-00	DS-A00T	DS-T156B	SD-06-47	SD-06-A6	DS-A00-.25-T	DT-35-.25	DS-T15B1
DN6G-25R01	SM40-115-00	DS-A00T	DS-T156B	SD-08-47	SD-08-C9	DS-A00-.25-T	DT-35-.25	DS-T15B1
DN5G-25R01	SM40-115-00	DS-A00T	DS-T156B	SD-08-47	SD-08-C9	DS-A00-.25-T	DT-35-.25	DS-T15B1
DN6G-30R01	SM40-115-00	DS-A00T	DS-T156B	SD-08-47	SD-08-C9	DS-A00-.25-T	DT-35-.25	DS-T15B1
DN5G-30R01	SM40-115-00	DS-A00T	DS-T156B	SD-08-47	SD-08-C9	DS-A00-.25-T	DT-35-.25	DS-T15B1
DN6G-40R01	SM40-115-00	DS-A00T	DS-T156B	SD-12-82	SD-12-99	DS-A00-.25-T	DT-35-.25	DS-T15B1
DN5G-40R01	SM40-115-00	DS-A00T	DS-T156B	SD-12-82	SD-12-99	DS-A00-.25-T	DT-35-.25	DS-T15B1
DN6G-50R01	SM40-115-00	DS-A00T	DS-T156B	SD-12-82	SD-12-99	DS-A00-.25-T	DT-35-.25	DS-T15B1
DN5G-50R01	SM40-115-00	DS-A00T	DS-T156B	SD-12-82	SD-12-99	DS-A00-.25-T	DT-35-.25	DS-T15B1
DN6G-60R01	SM40-115-00	DS-A00T	DS-T156B	-	-	DS-A00-.25-T	DT-35-.25	DS-T15B1
DN5G-60R01	SM40-115-00	DS-A00T	DS-T156B	-	-	DS-A00-.25-T	DT-35-.25	DS-T15B1
DG6G-20R01	SM40-115-00	DS-A00T	DS-T156B	SD-06-47	SD-06-A6	DS-A00-.25-T	DT-35-.25	DS-T15B1
DG6G-25R01	SM40-115-00	DS-A00T	DS-T156B	SD-08-47	SD-08-C9	DS-A00-.25-T	DT-35-.25	DS-T15B1
DG6G-30R01	SM40-115-00	DS-A00T	DS-T156B	SD-08-47	SD-08-C9	DS-A00-.25-T	DT-35-.25	DS-T15B1
DG6G-40R01	SM40-115-00	DS-A00T	DS-T156B	SD-12-82	SD-12-99	DS-A00-.25-T	DT-35-.25	DS-T15B1
METRIC								
DN5G040R00	SM40-115-00	DS-A00T	DS-T156B	SHM8X1.25X25	SHM8X1.25X25-C	DS-A00-.25-T	DT-35-.25	DS-T15B1
DN6G040R00	SM40-115-00	DS-A00T	DS-T156B	SHM8X1.25X25	SHM8X1.25X25-C	DS-A00-.25-T	DT-35-.25	DS-T15B1
DN5G050R00	SM40-115-00	DS-A00T	DS-T156B	SHLM10X1.5X25	SHLM10X1.5X25-C	DS-A00-.25-T	DT-35-.25	DS-T15B1
DN6G050R00	SM40-115-00	DS-A00T	DS-T156B	SHLM10X1.5X25	SHLM10X1.5X25-C	DS-A00-.25-T	DT-35-.25	DS-T15B1
DN5G063R00	SM40-115-00	DS-A00T	DS-T156B	SHM10X1.5X30	SHM10X1.5X30-C	DS-A00-.25-T	DT-35-.25	DS-T15B1
DN6G063R00	SM40-115-00	DS-A00T	DS-T156B	SHM10X1.5X30	SHM10X1.5X30-C	DS-A00-.25-T	DT-35-.25	DS-T15B1
DN5G080R00	SM40-115-00	DS-A00T	DS-T156B	SHLM12X1.75X30	SHLM12X1.75X30-C	DS-A00-.25-T	DT-35-.25	DS-T15B1
DN6G080R00	SM40-115-00	DS-A00T	DS-T156B	SHLM12X1.75X30	SHLM12X1.75X30-C	DS-A00-.25-T	DT-35-.25	DS-T15B1
DN5G100R00	SM40-115-00	DS-A00T	DS-T156B	SHLM16X2X35	SHLM16X2X35-C	DS-A00-.25-T	DT-35-.25	DS-T15B1
DN6G100R00	SM40-115-00	DS-A00T	DS-T156B	SHLM16X2X35	SHLM16X2X35-C	DS-A00-.25-T	DT-35-.25	DS-T15B1
DN5G125R00	SM40-115-00	DS-A00T	DS-T156B	SHM20X2.5X40	SHM20X2.5X40-C	DS-A00-.25-T	DT-35-.25	DS-T15B1
DN6G125R00	SM40-115-00	DS-A00T	DS-T156B	SHM20X2.5X40	SHM20X2.5X40-C	DS-A00-.25-T	DT-35-.25	DS-T15B1
DN5G160R00	SM40-115-00	DS-A00T	DS-T156B	-	-	DS-A00-.25-T	DT-35-.25	DS-T15B1
DN6G160R00	SM40-115-00	DS-A00T	DS-T156B	-	-	DS-A00-.25-T	DT-35-.25	DS-T15B1
DG6G050R00	SM40-115-00	DS-A00T	DS-T156B	SHM10X1.5X30	SHM10X1.5X30-C	DS-A00-.25-T	DT-35-.25	DS-T15B1
DG6G063R00	SM40-115-00	DS-A00T	DS-T156B	SHM10X1.5X30	SHM10X1.5X30-C	DS-A00-.25-T	DT-35-.25	DS-T15B1
DG6G080R00	SM40-115-00	DS-A00T	DS-T156B	SHM12X1.75X35	SHM12X1.75X35-C	DS-A00-.25-T	DT-35-.25	DS-T15B1
DG6G100R00	SM40-115-00	DS-A00T	DS-T156B	SHLM16X2X35	SHLM16X2X35-C	DS-A00-.25-T	DT-35-.25	DS-T15B1

Note: Insert screw torque for Carbide is 35 in lbs. Insert screw torque for SiN is 30 in lbs.

Face | Lead Angle | Channel

14 mm • Series DN5K, DN6K

45° FACE MILL

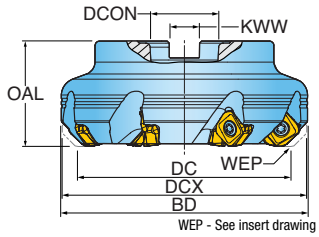

WEP - See insert drawing for wiper options.

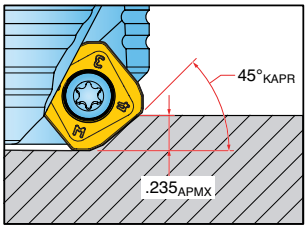

Part Number	DC Cutting Dia.	DCX Cutting Dia. Max.	OAL Overall Length	ZEFF Eff. Teeth	BD Body Dia.	DCON Bore Dia.	KWW Keyway	DBC Bolt Circle Dia.	CSP Coolant
INCH									
DN6K-20R01	2.000	2.61	1.750	4	2.67	0.7500	0.312	-	Yes
DN5K-20R01	2.000	2.61	1.750	6	2.67	0.7500	0.312	-	Yes
DN6K-25R01	2.500	3.11	1.750	6	3.17	1.0000	0.375	-	Yes
DN5K-25R01	2.500	3.11	1.750	8	3.17	1.0000	0.375	-	Yes
DN6K-30R01	3.000	3.61	1.750	7	3.67	1.0000	0.375	-	Yes
DN5K-30R01	3.000	3.61	1.750	10	3.67	1.0000	0.375	-	Yes
DN6K-40R01	4.000	4.61	2.375	8	4.67	1.5000	0.625	-	Yes
DN5K-40R01	4.000	4.61	2.375	12	4.67	1.5000	0.625	-	Yes
DN6K-50R01	5.000	5.61	2.375	10	5.67	1.5000	0.625	-	Yes
DN5K-50R01	5.000	5.61	2.375	16	5.67	1.5000	0.625	-	Yes
DN6K-60R01	6.000	6.61	2.375	12	6.67	1.5000	0.625	-	No
DN5K-60R01	6.000	6.61	2.375	20	6.67	1.5000	0.625	-	No
DN6K-80R01	8.000	8.61	2.375	18	8.67	2.5000	1.000	4.00	No
DN5K-80R01	8.000	8.61	2.375	26	8.67	2.5000	1.000	4.00	No
METRIC									
DN6K050R00	50.00 mm	65.5 mm	40.00 mm	4	67.0 mm	22.00 mm	10.40 mm	-	Yes
DN5K050R00	50.00 mm	65.5 mm	40.00 mm	6	67.0 mm	22.00 mm	10.40 mm	-	Yes
DN6K063R00	63.00 mm	78.5 mm	50.00 mm	6	80.0 mm	22.00 mm	10.40 mm	-	Yes
DN5K063R00	63.00 mm	78.5 mm	50.00 mm	8	80.0 mm	22.00 mm	10.40 mm	-	Yes
DN6K080R00	80.00 mm	95.5 mm	50.00 mm	7	97.0 mm	27.00 mm	12.40 mm	-	Yes
DN5K080R00	80.00 mm	95.5 mm	50.00 mm	10	97.0 mm	27.00 mm	12.40 mm	-	Yes
DN6K100R00	100.00 mm	115.5 mm	50.00 mm	8	117.0 mm	32.00 mm	14.40 mm	-	Yes
DN5K100R00	100.00 mm	115.5 mm	50.00 mm	12	117.0 mm	32.00 mm	14.40 mm	-	Yes
DN6K125R00	125.00 mm	140.5 mm	63.00 mm	10	142.0 mm	40.00 mm	16.40 mm	-	Yes
DN5K125R00	125.00 mm	140.5 mm	63.00 mm	16	142.0 mm	40.00 mm	16.40 mm	-	Yes
DN6K160R00	160.00 mm	175.5 mm	63.00 mm	12	177.0 mm	40.00 mm	16.40 mm	-	No
DN5K160R00	160.00 mm	175.5 mm	63.00 mm	20	177.0 mm	40.00 mm	16.40 mm	-	No
DN6K200R00	200.00 mm	215.5 mm	63.00 mm	18	217.0 mm	60.00 mm	25.70 mm	101.6 mm	No
DN5K200R00	200.00 mm	215.5 mm	63.00 mm	26	217.0 mm	60.00 mm	25.70 mm	101.6 mm	No

Face | Lead Angle | Channel | Plunge

14 mm • Series DG6K

20° FACE MILL • HI-FEED

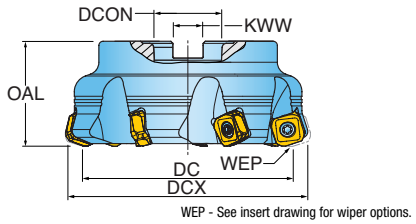

WEP - See insert drawing for wiper options.

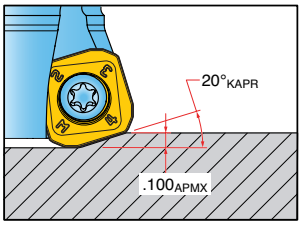

Part Number	DC Cutting Diameter	DCX Cutting Diameter Max.	OAL Overall Length	ZEFF Eff. Teeth	DCON Bore Diameter	KWW Keyway	CSP Coolant
INCH							
DG6K-25R01	2.500	3.19	1.750	5	1.00	0.375	Yes
DG6K-30R01	3.000	3.69	1.750	6	1.00	0.375	Yes
DG6K-40R01	4.000	4.69	2.375	7	1.50	0.625	Yes
DG6K-60R01	6.000	6.69	2.375	8	1.50	0.625	No
METRIC							
DG6K063R00	63.00 mm	80.6 mm	50.00 mm	5	22.00 mm	10.40 mm	Yes
DG6K080R00	80.00 mm	97.6 mm	50.00 mm	6	27.00 mm	12.40 mm	Yes
DG6K100R00	100.00 mm	117.5 mm	50.00 mm	7	32.00 mm	14.40 mm	Yes
DG6K125R00	125.00 mm	142.5 mm	63.00 mm	8	40.00 mm	16.40 mm	Yes

14 mm • Inserts

FOR SERIES DN5K, DN6K, AND DG6K

SQGU14_M

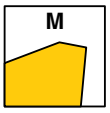

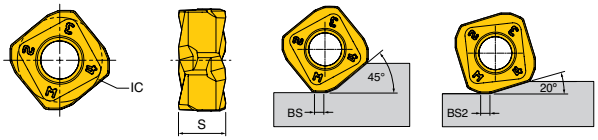

SQGU14_ML

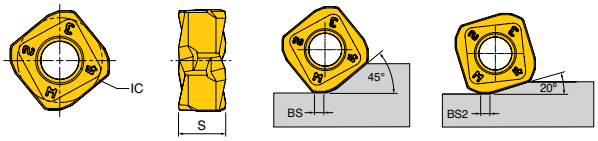

SQMU14_ANN

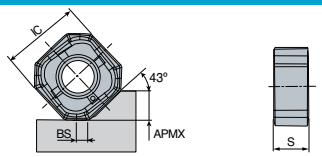

Part Number	Application	BS Wiper Length	BS2 Wiper Length	IC Inscribed Circle Dia.	S Thickness	NOI Number of Indexes	IH Insert Hand	Grade					
								IN2036	IN2505	IN2510	IN2530	IN6537	IN71N
SQGU1406ANR-M	Multi-Purpose	0.079	0.063	0.57	0.307	8	Right		•	•		•	
SQGU1406ANR-ML	SS / Hi-Temp / Ti	0.079	0.063	0.57	0.307	8	Right	•	•		•		
SQMU1406ANN*	SiN for Iron	0.067	-	0.57	0.250	8	Right						•

*Ceramic insert is only usable in the 45° Face mills

14 mm • Hardware

Part Number	Screw	Driver Handle	Torx Driver Blade	Retention Bolt	Optional: Coolant Retention Bolt	Optional: Torque Driver Handle	Optional: Preset Torque Adapter	Optional: Torque Driver Bit
INCH								
DN6K-20R01	SM50-130-R0	DS-A00T	DS-T206B	SD-06-47	SD-06-A6	DS-A00-.25-T	DT-44-.25	DS-T20B1
DN5K-20R01	SM50-130-R0	DS-A00T	DS-T206B	SD-06-47	SD-06-A6	DS-A00-.25-T	DT-44-.25	DS-T20B1
DN6K-25R01	SM50-130-R0	DS-A00T	DS-T206B	SD-08-47	SD-08-C9	DS-A00-.25-T	DT-44-.25	DS-T20B1
DN5K-25R01	SM50-130-R0	DS-A00T	DS-T206B	SD-08-47	SD-08-C9	DS-A00-.25-T	DT-44-.25	DS-T20B1
DN6K-30R01	SM50-130-R0	DS-A00T	DS-T206B	SD-08-47	SD-08-C9	DS-A00-.25-T	DT-44-.25	DS-T20B1
DN5K-30R01	SM50-130-R0	DS-A00T	DS-T206B	SD-08-47	SD-08-C9	DS-A00-.25-T	DT-44-.25	DS-T20B1
DN6K-40R01	SM50-130-R0	DS-A00T	DS-T206B	SD-12-82	SD-12-99	DS-A00-.25-T	DT-44-.25	DS-T20B1
DN5K-40R01	SM50-130-R0	DS-A00T	DS-T206B	SD-12-82	SD-12-99	DS-A00-.25-T	DT-44-.25	DS-T20B1
DN6K-50R01	SM50-130-R0	DS-A00T	DS-T206B	SD-12-82	SD-12-99	DS-A00-.25-T	DT-44-.25	DS-T20B1
DN5K-50R01	SM50-130-R0	DS-A00T	DS-T206B	SD-12-82	SD-12-99	DS-A00-.25-T	DT-44-.25	DS-T20B1
DN6K-60R01	SM50-130-R0	DS-A00T	DS-T206B	-	-	DS-A00-.25-T	DT-44-.25	DS-T20B1
DN5K-60R01	SM50-130-R0	DS-A00T	DS-T206B	-	-	DS-A00-.25-T	DT-44-.25	DS-T20B1
DN6K-80R01	SM50-130-R0	DS-A00T	DS-T206B	-	-	DS-A00-.25-T	DT-44-.25	DS-T20B1
DN5K-80R01	SM50-130-R0	DS-A00T	DS-T206B	-	-	DS-A00-.25-T	DT-44-.25	DS-T20B1
DG6K-25R01	SM50-130-R0	DS-A00T	DS-T206B	SD-08-47	SD-08-C9	DS-A00-.25-T	DT-44-.25	DS-T20B1
DG6K-30R01	SM50-130-R0	DS-A00T	DS-T206B	SD-08-47	SD-08-C9	DS-A00-.25-T	DT-44-.25	DS-T20B1
DG6K-40R01	SM50-130-R0	DS-A00T	DS-T206B	SD-12-82	SD-12-99	DS-A00-.25-T	DT-44-.25	DS-T20B1
DG6K-60R01	SM50-130-R0	DS-A00T	DS-T206B	-	-	DS-A00-.25-T	DT-44-.25	DS-T20B1
METRIC								
DN6K050R00	SM50-130-R0	DS-A00T	DS-T206B	SHLM10X1.5X25	SHLM10X1.5X25-C	DS-A00-.25-T	DT-44-.25	DS-T20B1
DN5K050R00	SM50-130-R0	DS-A00T	DS-T206B	SHLM10X1.5X25	SHLM10X1.5X25-C	DS-A00-.25-T	DT-44-.25	DS-T20B1
DN6K063R00	SM50-130-R0	DS-A00T	DS-T206B	SHM10X1.5X30	SHM10X1.5X30-C	DS-A00-.25-T	DT-44-.25	DS-T20B1
DN5K063R00	SM50-130-R0	DS-A00T	DS-T206B	SHM10X1.5X30	SHM10X1.5X30-C	DS-A00-.25-T	DT-44-.25	DS-T20B1
DN6K080R00	SM50-130-R0	DS-A00T	DS-T206B	SHLM12X1.75X30	SHLM12X1.75X30-C	DS-A00-.25-T	DT-44-.25	DS-T20B1
DN5K080R00	SM50-130-R0	DS-A00T	DS-T206B	SHLM12X1.75X30	SHLM12X1.75X30-C	DS-A00-.25-T	DT-44-.25	DS-T20B1
DN6K100R00	SM50-130-R0	DS-A00T	DS-T206B	SHLM16X2X35	SHLM16X2X35-C	DS-A00-.25-T	DT-44-.25	DS-T20B1
DN5K100R00	SM50-130-R0	DS-A00T	DS-T206B	SHLM16X2X35	SHLM16X2X35-C	DS-A00-.25-T	DT-44-.25	DS-T20B1
DN6K125R00	SM50-130-R0	DS-A00T	DS-T206B	SHM20X2.5X40	SHM20X2.5X40-C	DS-A00-.25-T	DT-44-.25	DS-T20B1
DN5K125R00	SM50-130-R0	DS-A00T	DS-T206B	SHM20X2.5X40	SHM20X2.5X40-C	DS-A00-.25-T	DT-44-.25	DS-T20B1
DN6K160R00	SM50-130-R0	DS-A00T	DS-T206B	-	-	DS-A00-.25-T	DT-44-.25	DS-T20B1
DN5K160R00	SM50-130-R0	DS-A00T	DS-T206B	-	-	DS-A00-.25-T	DT-44-.25	DS-T20B1
DN6K200R00	SM50-130-R0	DS-A00T	DS-T206B	-	-	DS-A00-.25-T	DT-44-.25	DS-T20B1
DN5K200R00	SM50-130-R0	DS-A00T	DS-T206B	-	-	DS-A00-.25-T	DT-44-.25	DS-T20B1
DG6K063R00	SM50-130-R0	DS-A00T	DS-T206B	SHM10X1.5X30	SHM10X1.5X30-C	DS-A00-.25-T	DT-44-.25	DS-T20B1
DG6K080R00	SM50-130-R0	DS-A00T	DS-T206B	SHM12X1.75X35	SHM12X1.75X35-C	DS-A00-.25-T	DT-44-.25	DS-T20B1
DG6K100R00	SM50-130-R0	DS-A00T	DS-T206B	SHLM16X2X35	SHLM16X2X35-C	DS-A00-.25-T	DT-44-.25	DS-T20B1
DG6K125R00	SM50-130-R0	DS-A00T	DS-T206B	SHM20X2.5X40	SHM20X2.5X40-C	DS-A00-.25-T	DT-44-.25	DS-T20B1

Note: Insert screw torque for Carbide is 35 in lbs. Insert screw torque for SiN is 30 in lbs.

11 mm (45º) • Operating Guidelines

Chip Thinning

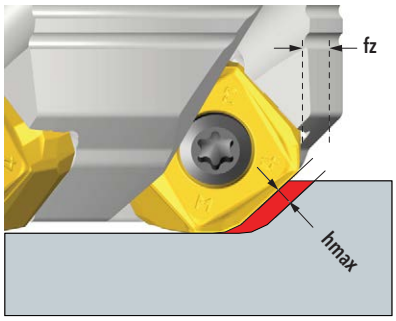

* Chip Thinning Calculator is recommended to ensure hmax is greater than .003"

Materials				Vc Cutting Speed SFM	fz* Feed/Tooth (inch)	Harder «----------» Tougher						Coolant
						Ceramic	Carbide					
ISO	Material Group #VDI 3323	Type	Examples			IN71N	IN2510	IN2505	IN2530	IN2036	IN6537	
P	1–5	Non-Alloy Steel	1018, A36, 1045, A572, 1070	400–1000	.005–.015			3	2		1	No
	6–9	Low-Alloy Steel	4140, 4340, P20, 8620, 300M	350–700								
	10–11	High-Alloy Steel	H13, A2, D2, M2, T1	300–600								
M	12 - 13	Stainless Steel (Ferritic & Martensitic)	410, 416, 440	400-700	.005–.010			3	2	1		May not be required at high speeds
	14	Stainless Steel (Austenitic)	303, 304, 316, 15-5, 17-4	300-600								
K	15–16	Gray Cast Iron	CLS. 20, 30, 45	500–1000	.005–.016		1	2			3	No
				1800-3000	.005–.010	1						
	17–18	Nodular Cast Iron	60-40-18, 100-70-03	400-800	.005–.016		1	2			3	
				1500-2500	.005–.010	1						
S	31 - 35	High-Temp Alloys	Inconel, Hastelloy, Nimonic, Monel	75-120	.005–.015			3	2	1		Yes
	36 - 37	Titanium Alloys	6Al-4V, 5Al-5Mo-5V-3Cr	100-150				2	3	1		

Note: Feed and speed recommendations are starting operating parameters. They are only guidelines from which further optimization should take place. Operating parameters are influenced by many machining variables. These variables may cause for reductions in feeds and speed or dramatic increases. Additionally, DOC and WOC may need to be revised to optimize the tools performance.

11 mm (20º) • Operating Guidelines

Plunge Mill Stepover Routine

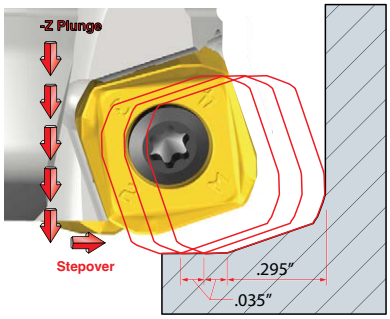

Initial stepover can be up to .295" max, with subsequent stepovers at .035".

Chip Thinning

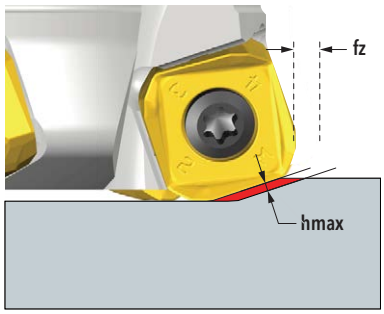

* Chip Thinning Calculator is recommended to ensure hmax is greater than .003"

Materials				Vc Cutting Speed SFM	fz* Feed/ Tooth (inch) Hi-Feed	fz Feed/ Tooth (inch) Plunge	Harder «--------» Tougher					Coolant
ISO	Material Group #VDI 3323	Type	Examples				IN2510	IN2505	IN2530	IN2036	IN6537	
P	1-5	Non-Alloy Steel	1018, A36, 1045, A572, 1070	400-1000	.012-.065	.004-.012		3	2		1	No
	6-9	Low-Alloy Steel	4140, 4340, P20, 8620, 300M	350-700								
	10-11	High-Alloy Steel	H13, A2, D2, M2, T1	300-600								
M	12 - 13	Stainless Steel (Ferritic & Martensitic)	410, 416, 440	400-700	.012-.060	.004-.010		3	2	1		May not be required at high speeds
	14	Stainless Steel (Austenitic)	303, 304, 316, 15-5, 17-4	300-600								
K	15-16	Gray Cast Iron	CLS. 20, 30, 45	500-1000	.015-.075	.004-.013	1	2			3	No
	17-18	Nodular Cast Iron	60-40-18, 100-70-03	400-800								
S	31 - 35	High-Temp Alloys	Inconel, Hastelloy, Nimonic, Monel	75-120	.012-.050	.004-.010		3	2	1		Yes
	36 - 37	Titanium Alloys	6Al-4V, 5Al-5Mo-5V-3Cr	100-150				2	3	1		

Note: Feed and speed recommendations are starting operating parameters. They are only guidelines from which further optimization should take place. Operating parameters are influenced by many machining variables. These variables may cause for reductions in feeds and speed or dramatic increases. Additionally, DOC and WOC may need to be revised to optimize the tools performance.

14 mm (45º) • Operating Guidelines

Chip Thinning

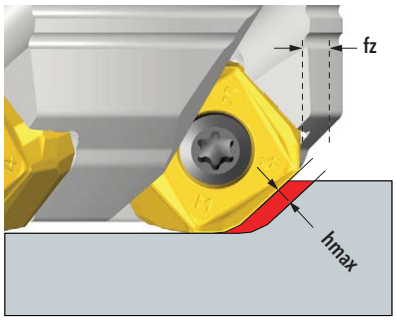

* Chip Thinning Calculator is recommended to ensure hmax is greater than .003"

Materials				Vc Cutting Speed SFM	fz* Feed/Tooth (inch)	Harder «----------» Tougher						Coolant
						Ceramic	Carbide					
ISO	Material Group #VDI 3323	Type	Examples			IN71N	IN2510	IN2505	IN2530	IN2036	IN6537	
P	1–5	Non-Alloy Steel	1018, A36, 1045, A572, 1070	400–1000	.005–.016			3	2		1	No
	6–9	Low-Alloy Steel	4140, 4340, P20, 8620, 300M	350–700								
	10–11	High-Alloy Steel	H13, A2, D2, M2, T1	300–600								
M	12 - 13	Stainless Steel (Ferritic & Martensitic)	410, 416, 440	400-700	.005–.010			3	2	1		May not be required at high speeds
	14	Stainless Steel (Austenitic)	303, 304, 316, 15-5, 17-4	300-600								
K	15–16	Gray Cast Iron	CLS. 20, 30, 45	500–1000	.015–.016		1	2			3	No
				1800-3000	.015–.010	1						
	17–18	Nodular Cast Iron	60-40-18, 100-70-03	400-800	.015–.016		1	2			3	
				1500-2500	.015–.010	1						
S	31 - 35	High-Temp Alloys	Inconel, Hastelloy, Nimonic, Monel	75-120	.005–.010			3	2	1		Yes
	36 - 37	Titanium Alloys	6Al-4V, 5Al-5Mo-5V-3Cr	100-150				2	3	1		

Note: Feed and speed recommendations are starting operating parameters. They are only guidelines from which further optimization should take place. Operating parameters are influenced by many machining variables. These variables may cause for reductions in feeds and speed or dramatic increases. Additionally, DOC and WOC may need to be revised to optimize the tools performance.

14 mm (20º) • Operating Guidelines

Plunge Mill Stepover Routine

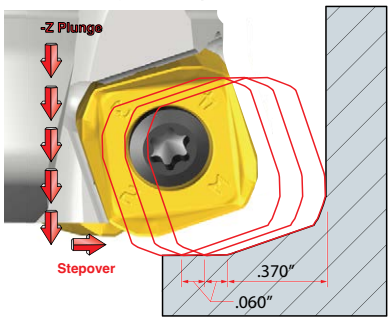

Initial stepover can be up to .370" max, with subsequent stepovers at .060".

Chip Thinning

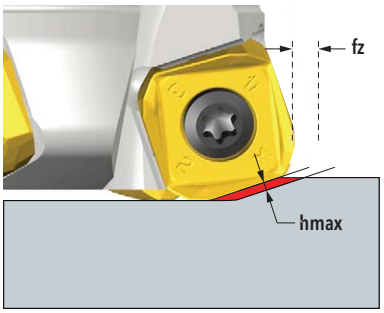

* Chip Thinning Calculator is recommended to ensure hmax is greater than .003"

Materials				Vc Cutting Speed SFM	fz* Feed/ Tooth (inch) Hi-Feed	fz Feed/ Tooth (inch) Plunge	Harder «--------» Tougher					Coolant
ISO	Material Group #VDI 3323	Type	Examples				IN2510	IN2505	IN2530	IN2036	IN6537	
P	1-5	Non-Alloy Steel	1018, A36, 1045, A572, 1070	400-1000	.015-.080	.004-.015		3	2		1	No
	6-9	Low-Alloy Steel	4140, 4340, P20, 8620, 300M	350-700								
	10-11	High-Alloy Steel	H13, A2, D2, M2, T1	300-600								
M	12 - 13	Stainless Steel (Ferritic & Martensitic)	410, 416, 440	400-700	.012-.065	.004-.012		3	2	1		May not be required at high speeds
	14	Stainless Steel (Austenitic)	303, 304, 316, 15-5, 17-4	300-600								
K	15-16	Gray Cast Iron	CLS. 20, 30, 45	500-1000	.015-.090	.004-.016	1	2			3	No
	17-18	Nodular Cast Iron	60-40-18, 100-70-03	400-800								
S	31 - 35	High-Temp Alloys	Inconel, Hastelloy, Nimonic, Monel	75-120	.012-.055	.004-.012		3	2	1		Yes
	36 - 37	Titanium Alloys	6Al-4V, 5Al-5Mo-5V-3Cr	100-150				2	3	1		

Note: Feed and speed recommendations are starting operating parameters. They are only guidelines from which further optimization should take place. Operating parameters are influenced by many machining variables. These variables may cause for reductions in feeds and speed or dramatic increases. Additionally, DOC and WOC may need to be revised to optimize the tools performance.