OPERATING GUIDELINES - 8MM INSERT (DM5G, DM6G, 4W2A)

Chip Thinning

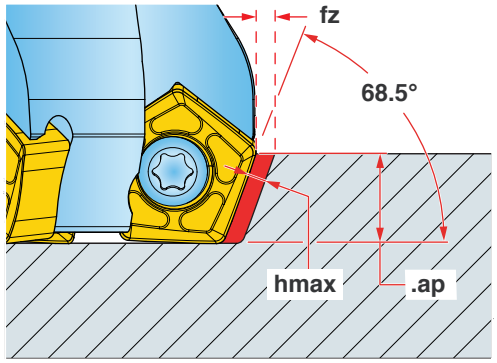

* Chip Thinning Calculator is recommended to ensure hmax is greater than .003"

Materials				Vc Cutting Speed SFM	fz Feed/Tooth (inch)	Harder ← → Tougher							Coolant
ISO	Mat'l Group	Type	Examples			IN70N	IN4015 IN6515	IN05S	IN2505 IN4005	IN4030	IN2036	IN6537	
P	1-5	Non-alloy Steel	1018, A36, 1045, A572, 1070	400-800	.003-.018								
	6-9	Low-alloy Steel	4140, 4340, P20, 8620, 300M	350-700	.003-.015				3	2		1	No
	10-11	High-alloy Steel	H13, A2, D2, M2, T1	300-600	.003-.015								
M	12-13	Stainless Steel (Ferritic & Martensitic)	410, 416, 440	350-600	.003-.010				2	1			Yes
	14	Stainless Steel (Austenitic)	303, 304, 316, 15-5, 17-4	300-550					3	2	1		May not be required at high speeds
K	15-16	Gray Cast Iron	CLS. 20, 30, 45	500-1000	.003-.018		1		2			3	No
				1800-3000	.003-.008	1							
	17-20	Nodular Cast Iron	60-40-18, 100-70-03	400-800	.003-.015		1		2			3	
				1500-2500	.003-.007	1							
N	21-30	Aluminum	7075, 6061	1000-2500	.002-.012		2	1					Yes
S	31-35	High-Temp Alloys	Inconel, Hastelloy, Nimonic, Monel	65-200	.003-.010				2	3	1		Yes
	36-37	Titanium Alloys	6Al-4V, 5Al-5Mo-5V-3Cr	85-200					3	2	1		

Note: Feed and speed recommendations are starting operating parameters. They are only guidelines from which further optimization should take place. Operating parameters are influenced by many machining variables. These variables may cause for reductions in feeds and speed or dramatic increases. Additionally, DOC and WOC may need to be revised to optimize the tools performance.